01 METAL CIRCULAR COAXIAL TYPE P/N DESCRIPTION :

01 D F3 X X XX 000C
① ② ③

① Insert
P=PEEK

② Contact Plating
2=15u" Min
A=2u" Min

③ Insert configuration
C5=Coaxial 50 Ohm

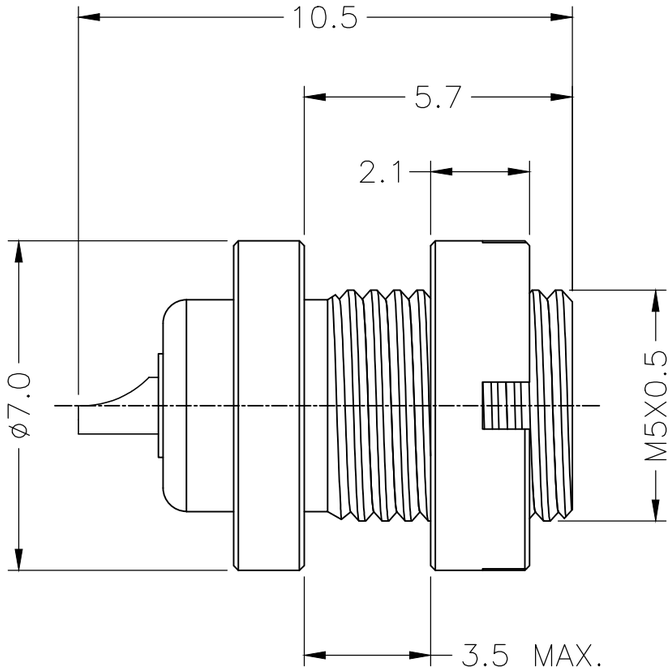

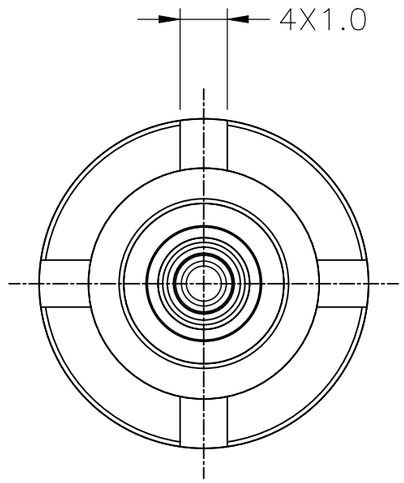

NOTE:

1. MATERIAL:

1.1.SHELL ASSEMBLY: COPPER ALLOY,OUTER SHELL AND NUT Au PLATING,
OTHER METALLIC COMPONENTS Au PLATING

1.2.INSERT: THERMOPLASTIC,UL94V-0

1.3.CENTER CONTACT : COPPER ALLOY,Au PLATING

2.RoHS DIRECTIVE COMPLIANCE

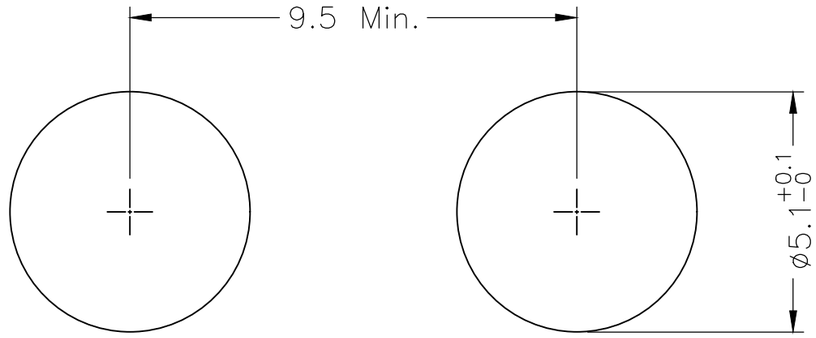

PANEL CUT-OUT

REV.	REVISION DESCRIPTION	ECR/ECN NO.	DATE

THIRD ANGLE PROJECTION

UNITS ■ mm □ INCH

ANGLES 0 PLC ± 3
1 PLC ± 2

TOLERANCES UNLESS OTHERWISE SPECIFIED
0 PLC ± 1.00
1 PLC ± 0.50
2 PLC ± 0.25
3 PLC ±
4 PLC ±

APPROVED BY	JACK	DATE	2025-12-1
CHECKED BY	CHARLES	DATE	2025-12-1
DRAWN BY	ANDY	DATE	2025-12-1

Dongguan Circon Technology Co.,Ltd.

TITLE: 01 METAL CIRCULAR CONNECTOR
COAXIAL TYPE-FIXED SOCKET

C	DRAWING NO.	A-M-739	REV. A0
	PART NO.	01DF3XXXXXXXC	

SIZE: A3 | SCALE: 1:1 | SHEET: 1 OF 1