1H CIRCULAR ASSEMBLY P/N DESCRIPTION :

1H E F1 X X XX X 0 C X 0

① ② ③ ④ ⑤

2 PIN	3 PIN	4 PIN	5 PIN	6 PIN	7 PIN	8 PIN	9 PIN	10 PIN	14 PIN
			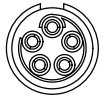	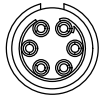	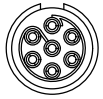		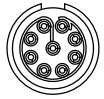	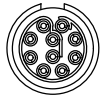	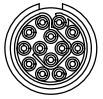

① Insert
P=PEEK
S=PPS

② Contact Plating
2=High Gold
A=Gold flash

③ Number of contacts
02=2Pin
⋮
14=14Pin

④ Keying
G=0° (2-14Pin)
A=40° (2-14Pin)
B=60° (2-14Pin)
C=80° (2-14Pin)
H=170° (8,10&14Pin)
J=205° (8,10&14Pin)

⑤ Shell&Nut A Colour
0= Black
2= Red
4= Golden
5= Green
6= Blue

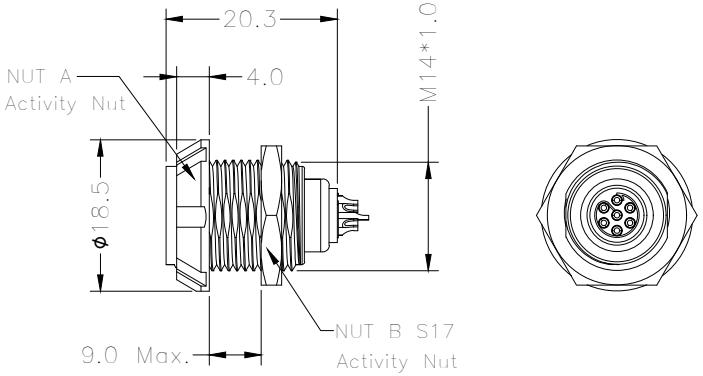

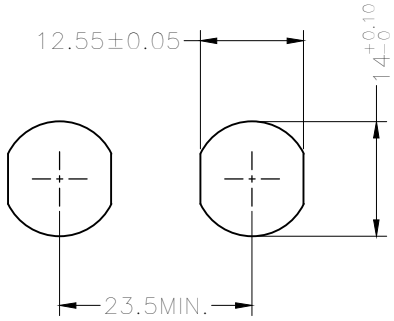

PANEL HOLE

NOTE:
1. MATERIAL:
1.1.OUTER SHELL: ALUMINIUM ALLOY, ANODIC OXIDATION
1.2.NUT A: ALUMINIUM ALLOY, ANODIC OXIDATION
1.3.NUT B: COPPER ALLOY, Ni PLATING
1.4.INSERT: THERMOPLASTIC,UL94V-0
1.5.CENTER CONTACT : COPPER ALLOY,Au PLATING
2.NUMBER OF CONTACT : 2 TO 14 POSITION
3.RoHS DIRECTIVE COMPLIANCE

THIRD ANGLE PROJECTION		TOLERANCES UNLESS OTHERWISE SPECIFIED		Dongguan Circon Technology Co.,Ltd.	
UNITS ■ mm □ INCH		0 PLC ± 1.00 1 PLC ± 0.50 2 PLC ± 0.25 3 PLC ± 4 PLC ±		TITLE: 1H CIRCULAR CONNECTOR FIXED SOCKETS SHELL MATERIAL:ALUMINIUM ALLOY	
ANGLES 0 PLC ± 3 1 PLC ± 2				C	DRAWING NO. A-M-079 / PART NO. 1HEF1XXXXX0CX0 / REV. A0
APPROVED BY	JACK	DATE	2019-4-18		
CHECKED BY	CHARLES	DATE	2019-4-18		
DRAWN BY	ANDY	DATE	2019-4-18	SIZE: A3	SCALE: 1:1 / SHEET: 1 OF 2

REV.	REVISION DESCRIPTION	ECR/ECN NO.	DATE

KEYING (RECEPTACLE FRONT VIEW):

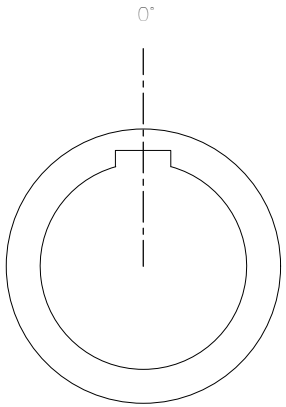

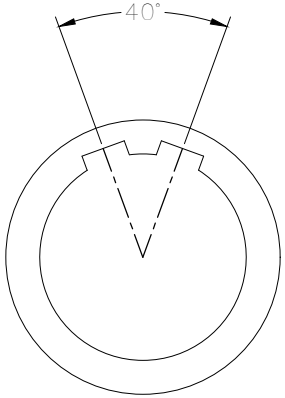

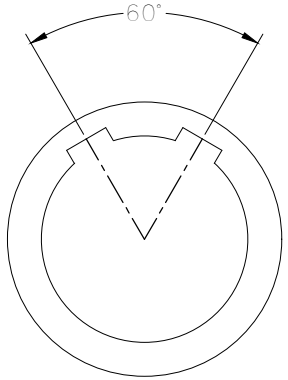

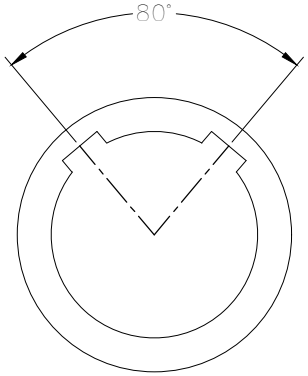

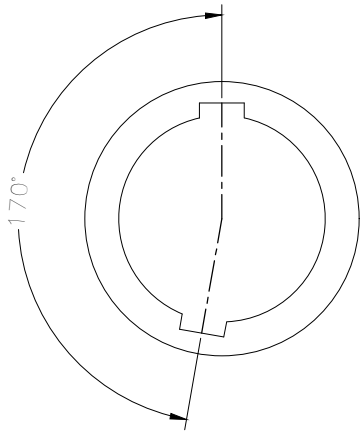

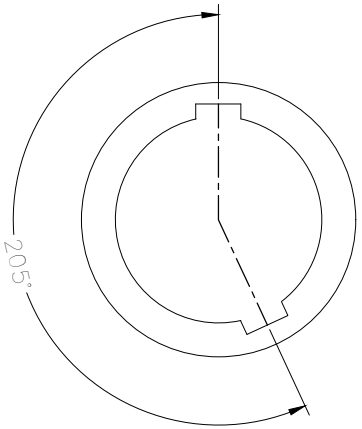

THIRD ANGLE PROJECTION		TOLERANCES UNLESS OTHERWISE SPECIFIED		Dongguan Circon Technology Co.,Ltd.	
UNITS ■ mm □ INCH		0 PLC ± 1.00 1 PLC ± 0.50 2 PLC ± 0.25 3 PLC ± 4 PLC ±		TITLE: 1H CIRCULAR CONNECTOR FIXED SOCKETS SHELL MATERIAL:ALUMINIUM ALLOY	
ANGLES 0 PLC ± 3 1 PLC ± 2				C	DRAWING NO. A-M-079 / PART NO. 1HEF1XXXXX0CX0 / REV. A0
APPROVED BY	JACK	DATE	2019-4-18		
CHECKED BY	CHARLES	DATE	2019-4-18		
DRAWN BY	ANDY	DATE	2019-4-18	SIZE: A3	SCALE: 1:1 / SHEET: 2 OF 2

REV.	REVISION DESCRIPTION	ECR/ECN NO.	DATE