1H CIRCULAR ASSEMBLY P/N DESCRIPTION :

1H A F5 X X XX X 0 C A 0
① ② ③ ④

2 PIN	3 PIN	4 PIN	5 PIN	6 PIN	7 PIN	8 PIN	9 PIN	10 PIN	12 PIN	14 PIN
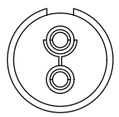		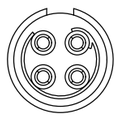	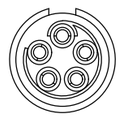	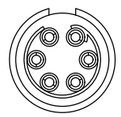	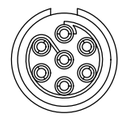	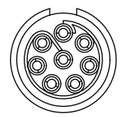	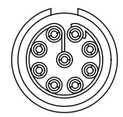	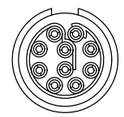	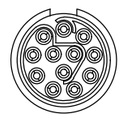	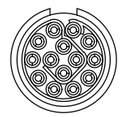

① Insert
P=PEEK
S=PPS

② Contact Plating
2=High Gold L=20 Min.
A=Gold flash L=20 Min.
9=High Gold L=16±1
Z=Gold flash L=16±1

③ Number of contacts
02=2Pin
⋮
14=14Pin

④ Keying
G= 0°
A= 40°
B= 60°
C= 80°
H=170°
J=205°

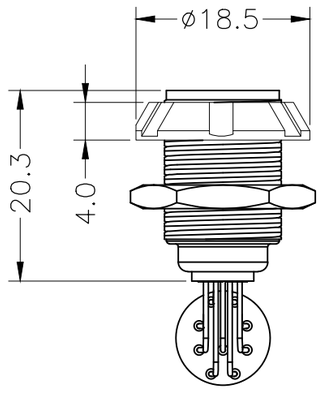

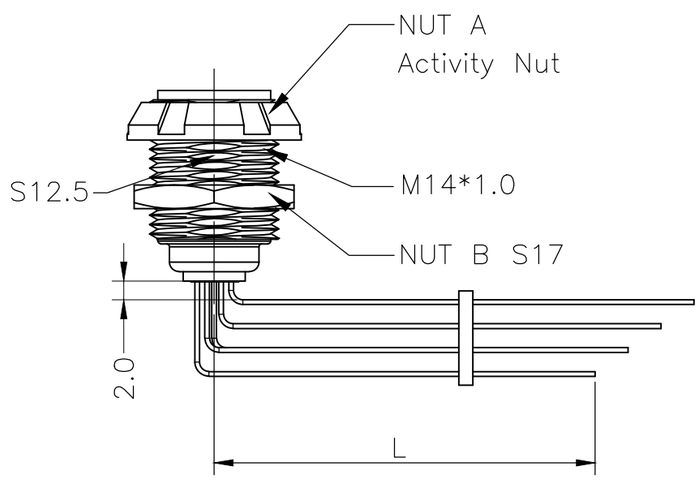

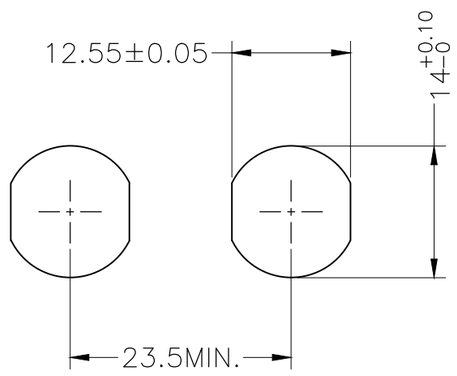

PANEL HOLE

NOTE:
1. MATERIAL:
1.1.OUTER SHELL: COPPER ALLOY,Cr PLATING
1.2.NUT A: COPPER ALLOY,Cr PLATING
1.3.NUT B: COPPER ALLOY,Ni PLATING
1.4.INSERT: THERMOPLASTIC,UL94V-0
1.5.CENTER CONTACT : COPPER ALLOY,Au PLATING
2.NUMBER OF CONTACT : 2 TO 14 POSITION
3.RoHS DIRECTIVE COMPLIANCE

REV.	REVISION DESCRIPTION	ECR/ECN NO.	DATE

THIRD ANGLE PROJECTION

UNITS ■ mm □ INCH

ANGLES 0 PLC ± 3
1 PLC ± 2

TOLERANCES UNLESS OTHERWISE SPECIFIED
0 PLC ± 1.00
1 PLC ± 0.50
2 PLC ± 0.25
3 PLC ±
4 PLC ±

APPROVED BY	JACK	DATE	2021-2-19
CHECKED BY	CHARLES	DATE	2021-2-19
DRAWN BY	ANDY	DATE	2021-2-19

Dongguan Circon Technology Co.,Ltd.

TITLE:
1H CIRCULAR CONNECTOR FIXED 90° SOCKETS
SHELL MATERIAL:COPPER ALLOY

C	DRAWING NO.	A-M-182	REV. A0
	PART NO.	1HAF5XXXXX0CA0	

SIZE: A3 SCALE: 1:1 SHEET: 1 OF 4

KEYING (RECEPTACLE FRONT VIEW):

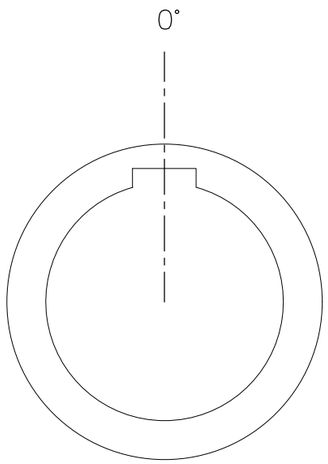

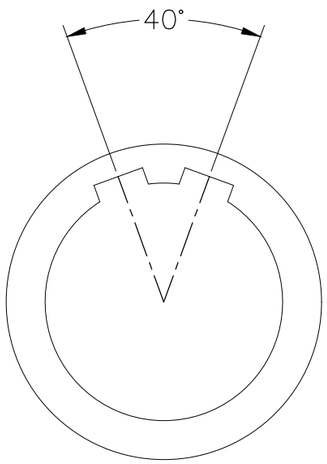

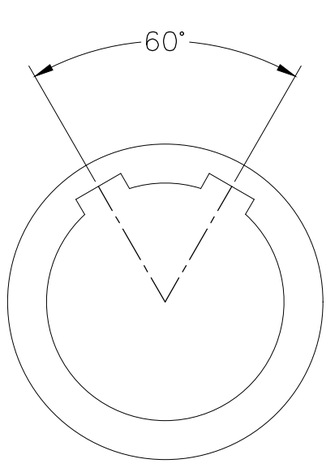

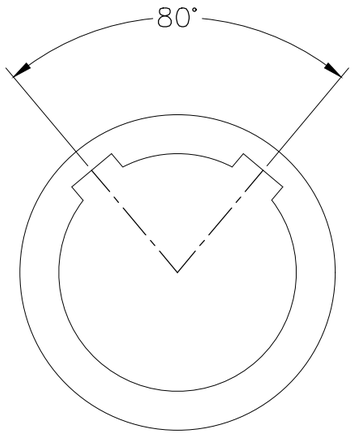

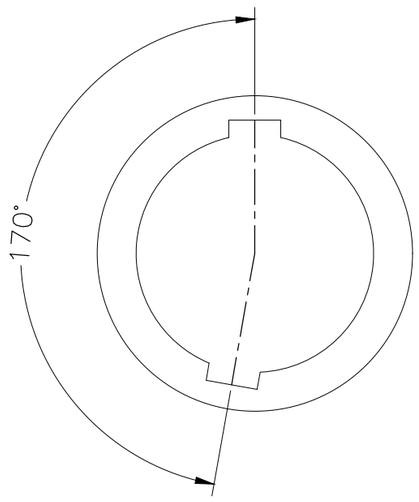

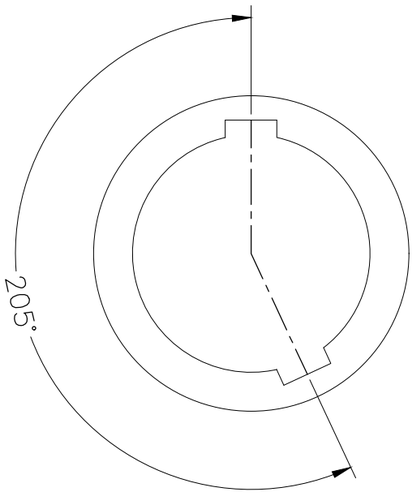

THIRD ANGLE PROJECTION		TOLERANCES UNLESS OTHERWISE SPECIFIED	
UNITS ■ mm □ INCH		0 PLC ± 1.00 1 PLC ± 0.50 2 PLC ± 0.25 3 PLC ± 4 PLC ±	
ANGLES 0 PLC ± 3 1 PLC ± 2			
APPROVED BY	JACK	DATE	2021-2-19
CHECKED BY	CHARLES	DATE	2021-2-19
DRAWN BY	ANDY	DATE	2021-2-19

Dongguan Circon Technology Co.,Ltd.

TITLE:
1H CIRCULAR CONNECTOR FIXED 90° SOCKETS
SHELL MATERIAL:COPPER ALLOY

C	DRAWING NO.	A-M-182	REV. A0
	PART NO.	1HAF5XXXXX0CA0	

SIZE: A3 | SCALE: 1:1 | SHEET: 2 OF 4

REV.	REVISION DESCRIPTION	ECR/ECN NO.	DATE

PCB DRILLING PATTEN:

2 PIN

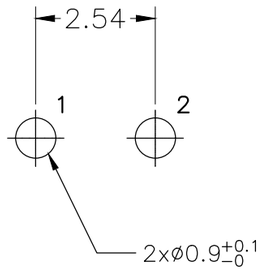

3 PIN

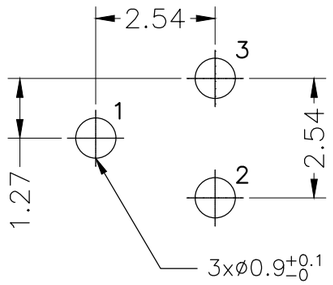

4 PIN

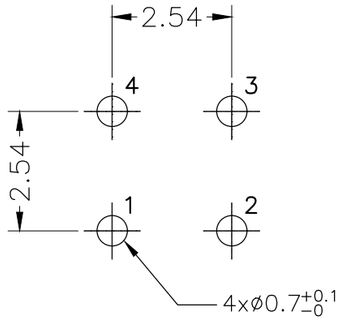

5 PIN

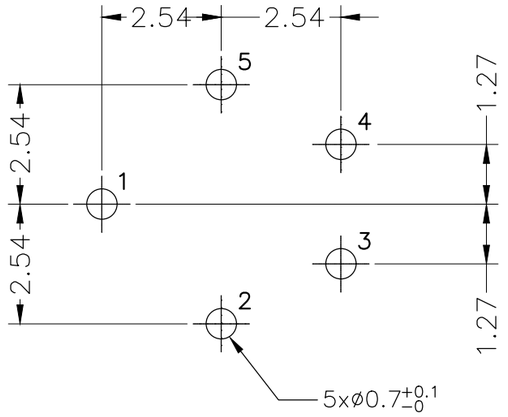

6 PIN

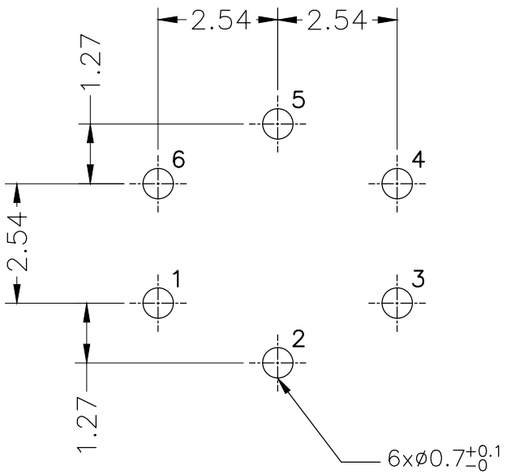

7 PIN

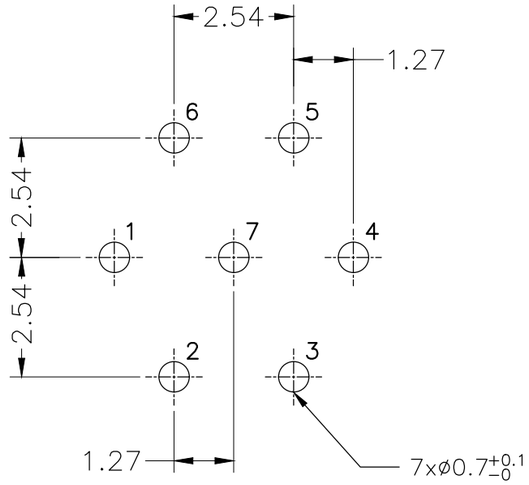

8 PIN

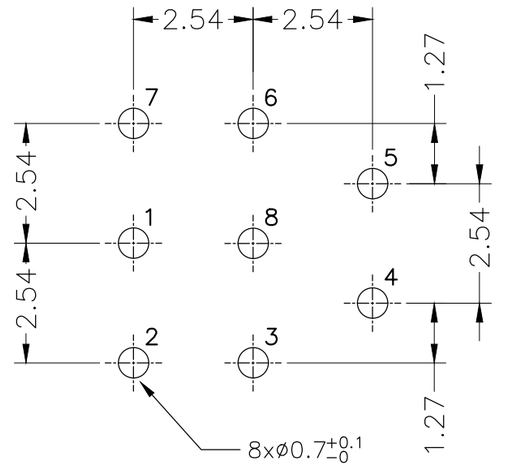

THIRD ANGLE PROJECTION		TOLERANCES UNLESS OTHERWISE SPECIFIED	
UNITS ■ mm □ INCH		0 PLC ± 1.00 1 PLC ± 0.50 2 PLC ± 0.25 3 PLC ± 4 PLC ±	
ANGLES 0 PLC ± 3 1 PLC ± 2			
APPROVED BY	JACK	DATE	2021−2−19
CHECKED BY	CHARLES	DATE	2021−2−19
DRAWN BY	ANDY	DATE	2021−2−19

Dongguan Circon Technology Co.,Ltd.

TITLE:
1H CIRCULAR CONNECTOR FIXED 90° SOCKETS
SHELL MATERIAL:COPPER ALLOY

C	DRAWING NO.	A−M−182	REV. A0
	PART NO.	1HAF5XXXXX0CA0	

SIZE: A3 | SCALE: 1:1 | SHEET: 3 OF 4

REV.	REVISION DESCRIPTION	ECR/ECN NO.	DATE

PCB DRILLING PATTEN:

9 PIN

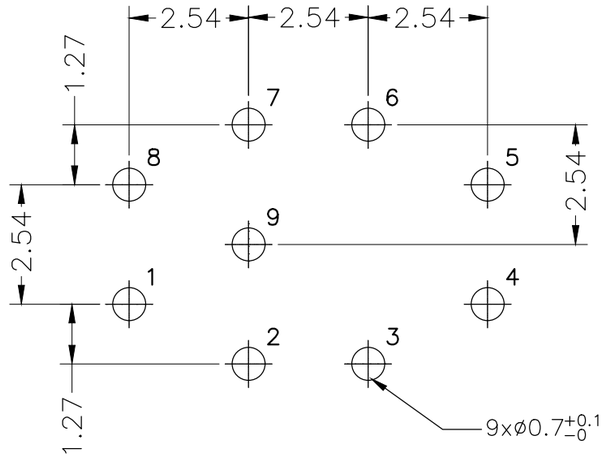

10 PIN

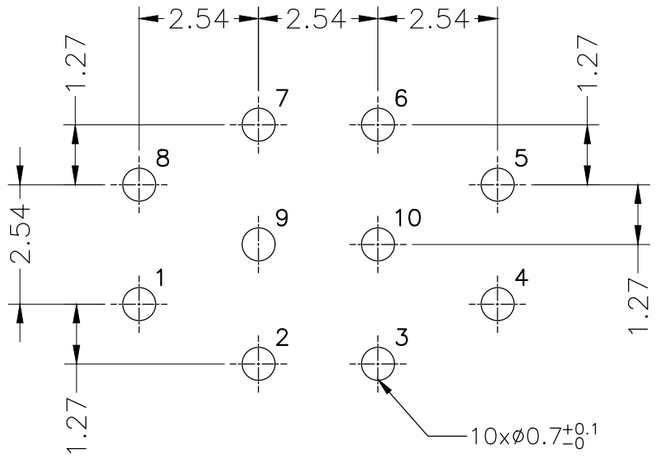

12 PIN

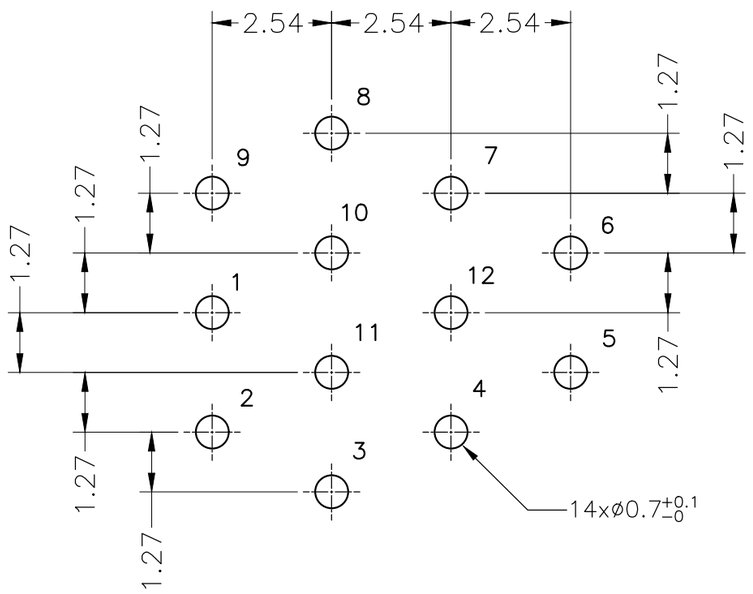

14 PIN

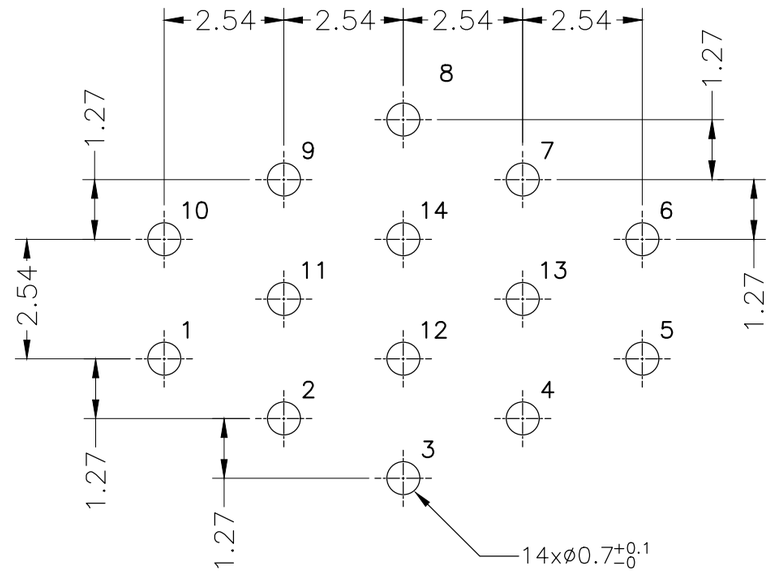

THIRD ANGLE PROJECTION		TOLERANCES UNLESS OTHERWISE SPECIFIED	
UNITS ■ mm □ INCH		0 PLC ± 1.00 1 PLC ± 0.50 2 PLC ± 0.25 3 PLC ± 4 PLC ±	
ANGLES 0 PLC ± 3 1 PLC ± 2			
APPROVED BY	JACK	DATE	2021-2-19
CHECKED BY	CHARLES	DATE	2021-2-19
DRAWN BY	ANDY	DATE	2021-2-19

Dongguan Circon Technology Co.,Ltd.

TITLE:
1H CIRCULAR CONNECTOR FIXED 90° SOCKETS
SHELL MATERIAL:COPPER ALLOY

C	DRAWING NO.	A-M-182	REV. A0
	PART NO.	1HAF5XXXXX0CA0	

SIZE: A3 | SCALE: 1:1 | SHEET: 4 OF 4

REV.	REVISION DESCRIPTION	ECR/ECN NO.	DATE