1H CIRCULAR ASSEMBLY P/N DESCRIPTION :

1H X FB X X XX X 0 C X X

① ② ③④ ⑤ ⑥⑦

	2 PIN	3 PIN	4 PIN	5 PIN	6 PIN	7 PIN	8 PIN	9 PIN	10 PIN	14 PIN
	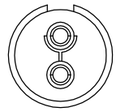			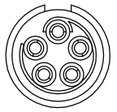	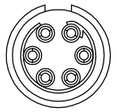	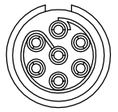	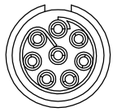	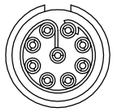	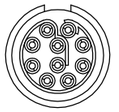	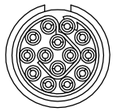
L	5	5	5	5	3	3	3	3	3	3
øD	0.7	0.7	0.7	0.7	0.5	0.5	0.5	0.5	0.5	0.5

① Shell:

A=Copper alloy,Cr Plating(Silvery white)

② Insert

P=PEEK

S=PPS

③ Contact Plating

2=High Gold

A=Gold flash

④ Number of contacts

02=2Pin

⋮

14=14Pin

⑤ Keying

G= 0°

A= 40°

B= 60°

C= 80°

H= 170°

J= 205°

⑥ Nut A Colour

A= Silvery white

⑦ Logo

0= No Logo

A= No Logo&With Ink mark

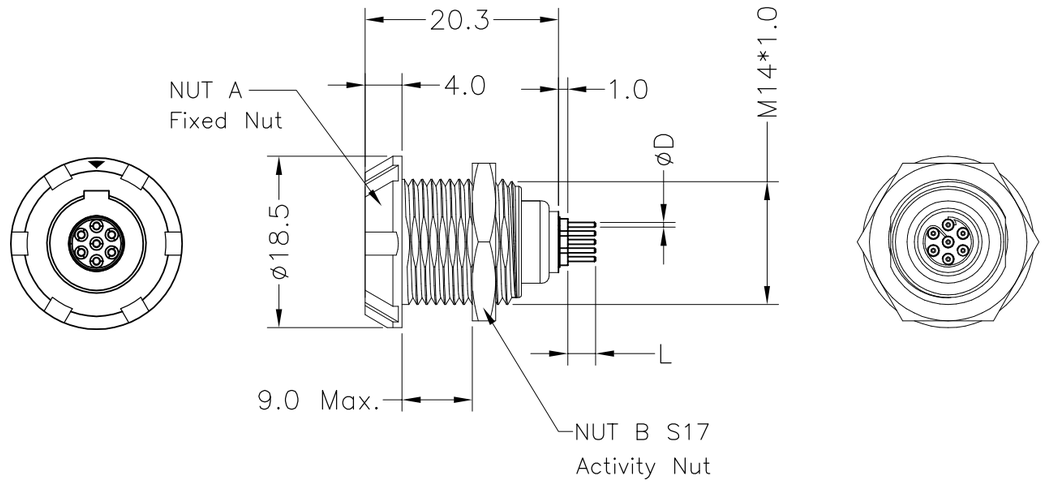

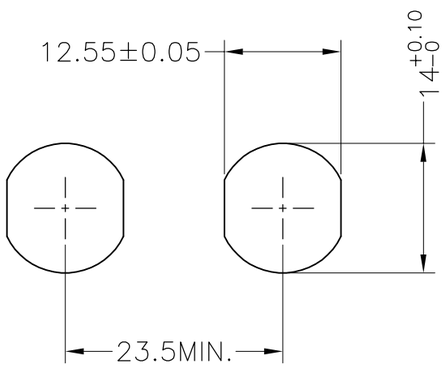

PANEL HOLE

NOTE:

1. MATERIAL:

1.1.OUTER SHELL: COPPER ALLOY, CR PLATING

1.2.NUT A: COPPER ALLOY, CR PLATING

1.3.NUT B: COPPER ALLOY, Ni PLATING

1.4.INSERT: THERMOPLASTIC,UL94V-0

1.5.CENTER CONTACT : COPPER ALLOY,Au PLATING

2.NUMBER OF CONTACT : 2 TO 14 POSITION

3.RoHS DIRECTIVE COMPLIANCE

THIRD ANGLE PROJECTION		TOLERANCES UNLESS OTHERWISE SPECIFIED		Dongguan Circon Technology Co.,Ltd.	
UNITS ■ mm □ INCH		0 PLC ± 1.00 1 PLC ± 0.50 2 PLC ± 0.25 3 PLC ± 4 PLC ±		TITLE: 1H CIRCULAR CONNECTOR FIXED SOCKETS SHELL MATERIAL:COPPER ALLOY	
ANGLES 0 PLC ± 3 1 PLC ± 2				C	DRAWING NO. A-M-371 REV. A0 PART NO. 1HXFBXXXXX0CX0
APPROVED BY	JACK	DATE	2023-3-25		
CHECKED BY	CHARLES	DATE	2023-3-25		
DRAWN BY	ANDY	DATE	2023-3-25	SIZE: A3	SCALE: 1:1 SHEET: 1 OF 3

REV.	REVISION DESCRIPTION	ECR/ECN NO.	DATE

KEYING (RECEPTACLE FRONT VIEW):

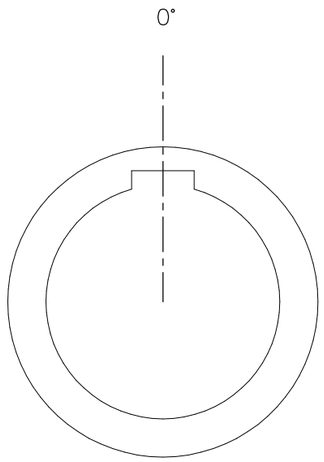

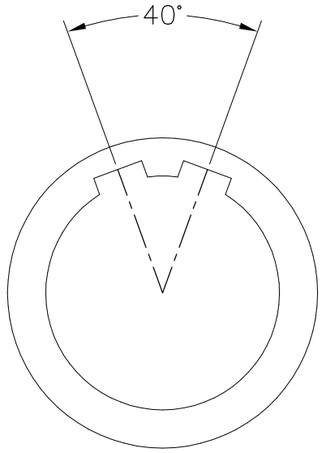

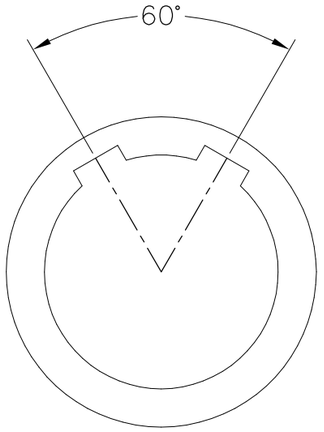

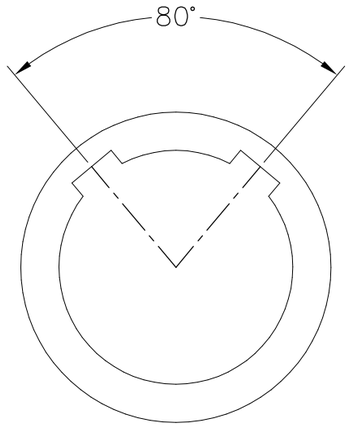

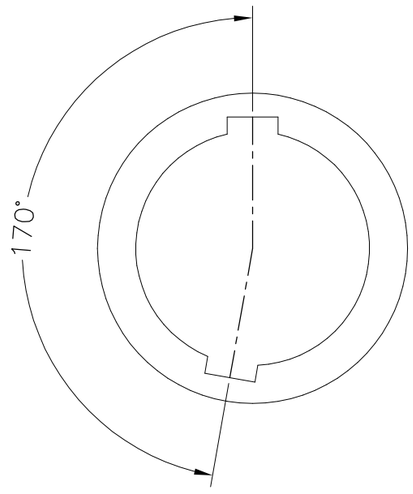

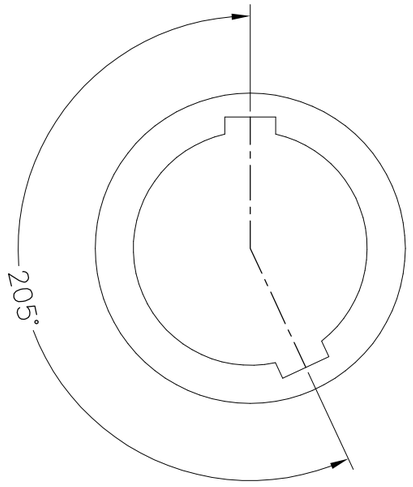

THIRD ANGLE PROJECTION		TOLERANCES UNLESS OTHERWISE SPECIFIED	0 PLC ± 1.00 1 PLC ± 0.50 2 PLC ± 0.25 3 PLC ± 4 PLC ±
UNITS ■ mm □ INCH			
ANGLES 0 PLC ± 3 1 PLC ± 2			

Dongguan Circon Technology Co.,Ltd.

TITLE:
1H CIRCULAR CONNECTOR FIXED SOCKETS
SHELL MATERIAL:COPPER ALLOY

APPROVED BY	JACK	DATE	2023-3-25	C	REV. A0
CHECKED BY	CHARLES	DATE	2023-3-25	DRAWING NO.	A-M-371
DRAWN BY	ANDY	DATE	2023-3-25	PART NO.	1HXFBXXXXX0CXX
SIZE: A3	SCALE: 1:1	SHEET: 2 OF 3			

REV.	REVISION DESCRIPTION	ECR/ECN NO.	DATE

PCB LAYOUT:

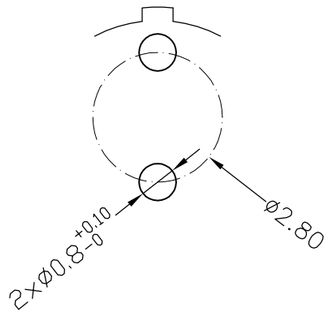

2 PIN

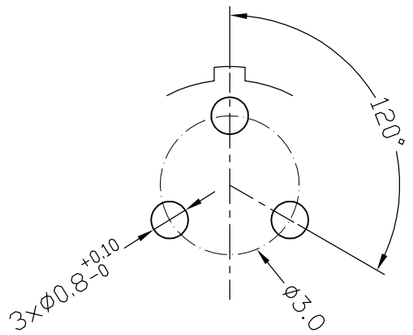

3 PIN

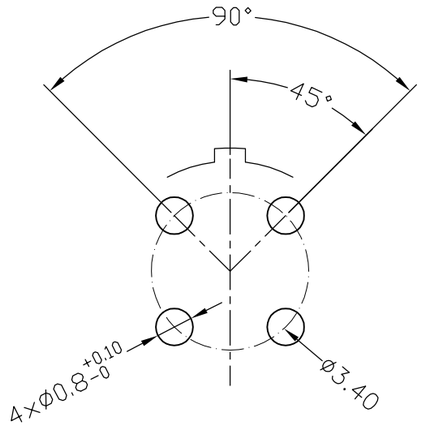

4 PIN

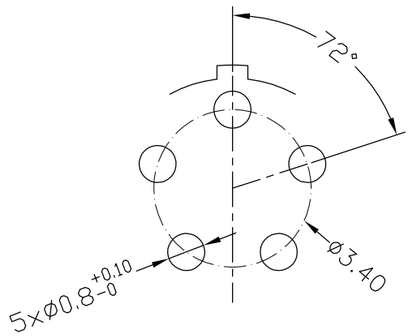

5 PIN

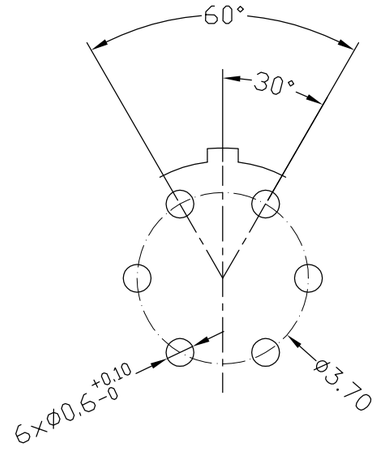

6 PIN

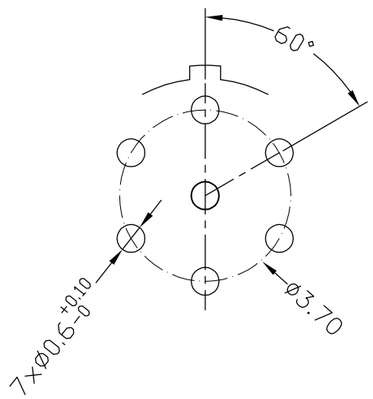

7 PIN

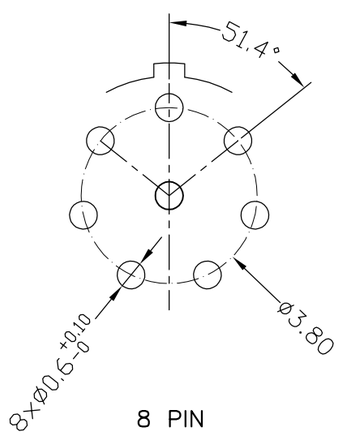

8 PIN

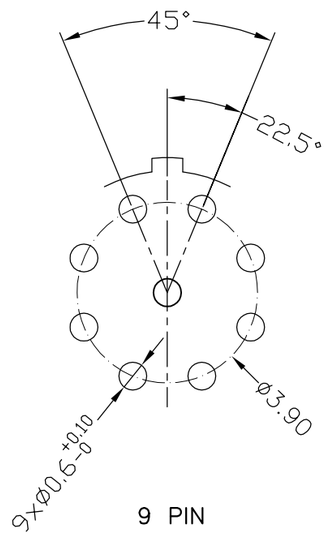

9 PIN

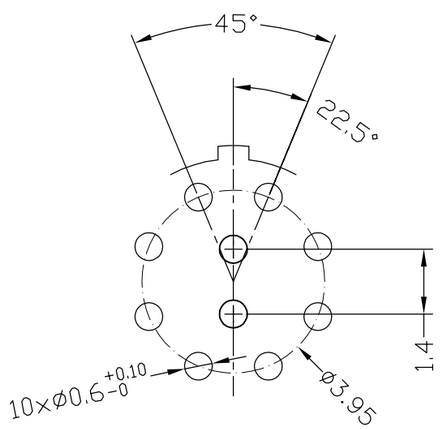

10 PIN

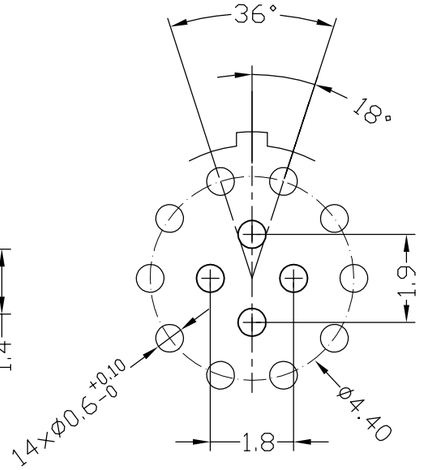

14 PIN

REV.	REVISION DESCRIPTION	ECR/ECN NO.	DATE	THIRD ANGLE PROJECTION			TOLERANCES UNLESS OTHERWISE SPECIFIED	Dongguan Circon Technology Co.,Ltd.	
				UNITS ■ mm □ INCH			0 PLC ± 1.00 1 PLC ± 0.50 2 PLC ± 0.25 3 PLC ± 4 PLC ±	TITLE: 1H CIRCULAR CONNECTOR FIXED SOCKETS SHELL MATERIAL:COPPER ALLOY	
				ANGLES 0 PLC ± 3 1 PLC ± 2				C	DRAWING NO. A-M-371 / PART NO. 1HXFBXXXXX0CXX	REV. A0
				APPROVED BY	JACK	DATE	2023-3-25		
				CHECKED BY	CHARLES	DATE	2023-3-25		
				DRAWN BY	ANDY	DATE	2023-3-25	SIZE: A3	SCALE: 1:1 / SHEET: 3 OF 3