1H CIRCULAR ASSEMBLY P/N DESCRIPTION :

1H X M1 X X XX X X A X 0
① ② ③④ ⑤ ⑥ ⑦

2 PIN	3 PIN	4 PIN	5 PIN	6 PIN	7 PIN	8 PIN	9 PIN	10 PIN	14 PIN
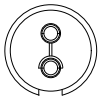					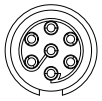	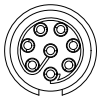	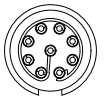		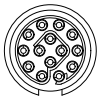

① Shell:

E=Outer shell:Aluminium alloy
Inner shell:Thermoplastic,grey

F=Outer shell:Aluminium alloy
Inner shell:Thermoplastic,black

② Insert
P=PEEK
S=PPS

③ Contact Plating
2=High Gold
A=Gold flash

④ Number of contacts
02=2Pin
⋮
14=14Pin

⑤ Keying
G= 0° (2-14Pin)
A= 40° (2-14Pin)
B=60° (2-14Pin)
C=80° (2-14Pin)
H=170° (8,10&14Pin)
J=205° (8,10&14Pin)

⑥ Cable collet
3=ϕ3.9mm (Cableϕ=2.7~3.9mm)
5=ϕ5.2mm (Cableϕ=4.0~5.2mm)
6=ϕ6.5mm (Cableϕ=5.3~6.5mm)

⑦ Shell&Nut Colour
0= Black
2= Red
4= Golden
5= Green
6= Blue

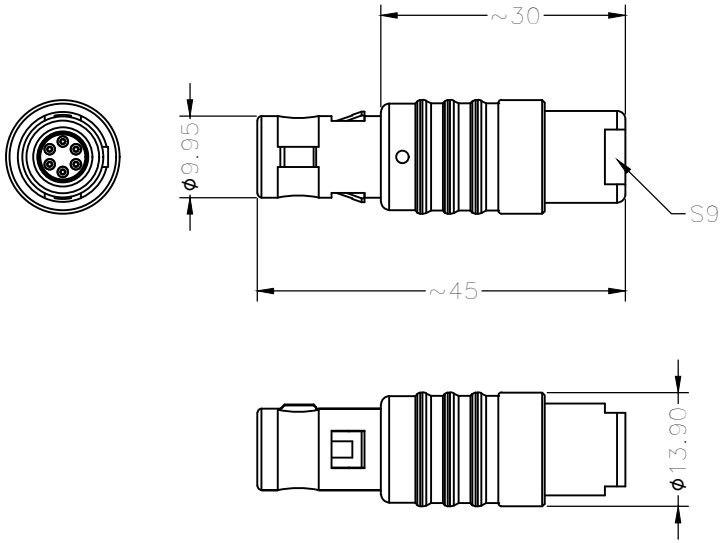

NOTE:
1. MATERIAL:
1.1.OUTER SHELL: ALUMINIUM ALLOY, ANODIC OXIDATION
1.2.INNER SHELL: THERMOPLASTIC,UL94V-0
1.3.NUT: ALUMINIUM ALLOY, ANODIC OXIDATION
1.4.CABLE COLLET: THERMOPLASTIC,UL94V-0
1.5.INSERT: THERMOPLASTIC,UL94V-0
1.6.CENTER CONTACT : COPPER ALLOY,Au PLATING
2.NUMBER OF CONTACT : 2 TO 14 POSITION
3.RoHS DIRECTIVE COMPLIANCE

REV.	REVISION DESCRIPTION	ECR/ECN NO.	DATE

THIRD ANGLE PROJECTION		TOLERANCES UNLESS OTHERWISE SPECIFIED	
UNITS ■ mm □ INCH		0 PLC ± 1.00 1 PLC ± 0.50 2 PLC ± 0.25 3 PLC ± 4 PLC ±	
ANGLES 0 PLC ± 3 1 PLC ± 2			
APPROVED BY	JACK	DATE	2019-4-18
CHECKED BY	CHARLES	DATE	2019-4-18
DRAWN BY	ANDY	DATE	2019-4-18

Dongguan Circon Technology Co.,Ltd.

TITLE:
1H CIRCULAR CONNECTOR STRAIGHT PLUGS
SHELL MATERIAL:ALUMINIUM ALLOY

C	DRAWING NO.	A-M-077	REV. A0
	PART NO.	1HXM1XXXXXXAX0	

SIZE: A3 | SCALE: 1:1 | SHEET: 1 OF 2

KEYING (PLUG FRONT VIEW):

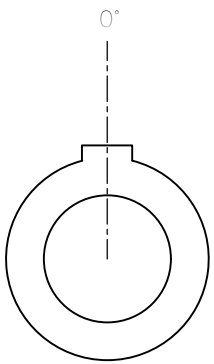

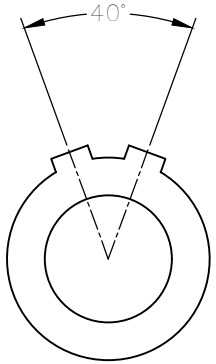

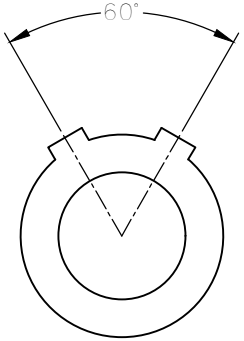

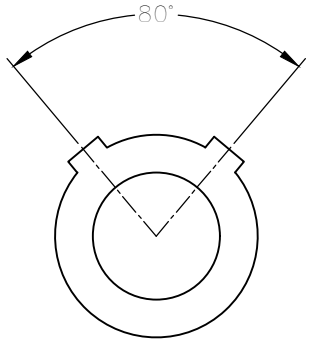

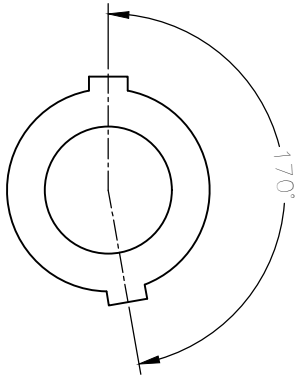

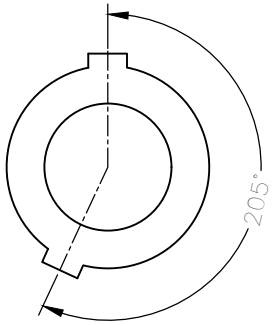

THIRD ANGLE PROJECTION		TOLERANCES UNLESS OTHERWISE SPECIFIED	
UNITS ■ mm □ INCH		0 PLC ± 1.00 1 PLC ± 0.50 2 PLC ± 0.25 3 PLC ± 4 PLC ±	
ANGLES 0 PLC ± 3 1 PLC ± 2			
APPROVED BY	JACK	DATE	2019-4-18
CHECKED BY	CHARLES	DATE	2019-4-18
DRAWN BY	ANDY	DATE	2019-4-18

Dongguan Circon Technology Co.,Ltd.

TITLE:
1H CIRCULAR CONNECTOR STRAIGHT PLUGS
SHELL MATERIAL:ALUMINIUM ALLOY

C	DRAWING NO.	A-M-077	REV. A0
	PART NO.	1HXM1XXXXXXAX0	

REV.	REVISION DESCRIPTION	ECR/ECN NO.	DATE

SIZE: A3 | SCALE: 1:1 | SHEET: 2 OF 2