2B METAL CIRCULAR ASSEMBLY P/N DESCRIPTION :

2B A F8 X X XX X X 0C
① ② ③ ④ ⑤

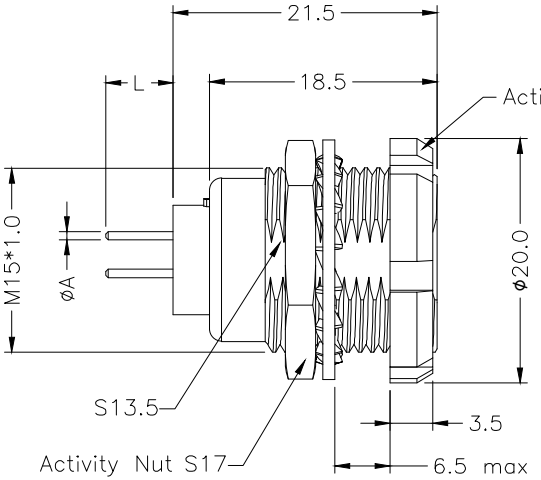

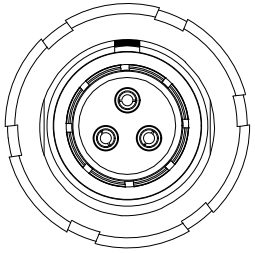

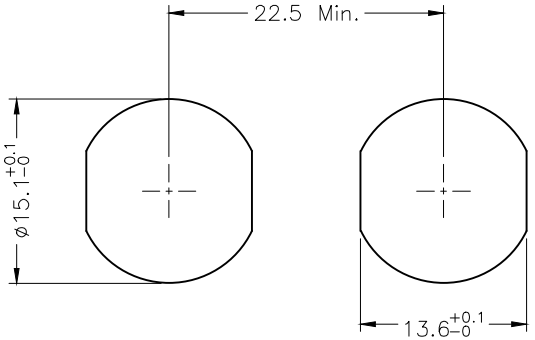

PANEL CUT-OUT

POSITION	2~19	26&32
øA	0.70	0.50

① Insert
P=PEEK
1=PPS

② Plating
2=High Gold
A=Gold flash

③ Number of contacts
02=2Pin
⋮
32=32Pin

④ Keying

G=0°	E=120°
A=30°	F=145°
B=45°	J=37.5°
C=60°	K=52.5°
D=95°	L=70°

⑤ L dimensions
3=3.00 (Standard type)
4=4.50 (Nonstandard type)
5=5.50 (Nonstandard type)

NOTE:

1. MATERIAL:

1.1.SHELL ASSEMBLY: COPPER ALLOY,OUTER SHELL AND COLLET NUT Cr PLATING, OTHER METALLIC COMPONENTS Ni PLATING

1.2.INSERT: THERMOPLASTIC,UL94V-0

1.3.CENTER CONTACT : COPPER ALLOY,Au PLATING

2.NUMBER OF CONTACT : 2 TO 32 POSITION

3.RoHS DIRECTIVE COMPLIANCE

REV.	REVISION DESCRIPTION	ECR/ECN NO.	DATE

THIRD ANGLE PROJECTION

UNITS ■ mm □ INCH

ANGLES 0 PLC ± 3
1 PLC ± 2

TOLERANCES UNLESS OTHERWISE SPECIFIED
0 PLC ± 1.00
1 PLC ± 0.50
2 PLC ± 0.25
3 PLC ±
4 PLC ±

APPROVED BY	JACK	DATE	2020-6-18
CHECKED BY	CHARLES	DATE	2020-6-18
DRAWN BY	ANDY	DATE	2020-6-18

Dongguan Circon Technology Co.,Ltd.

TITLE: 2B METAL CIRCULAR CONNECTOR
FIXED SOCKET-PCB CONTACTS

C	DRAWING NO.	A-M-167	REV. A0
	PART NO.	2BAF8XXXXXX0C	

SIZE: A3 | SCALE: 1:1 | SHEET: 1 OF 4

KEYING ANGLES (RECEPTACLE FRONT VIEW):

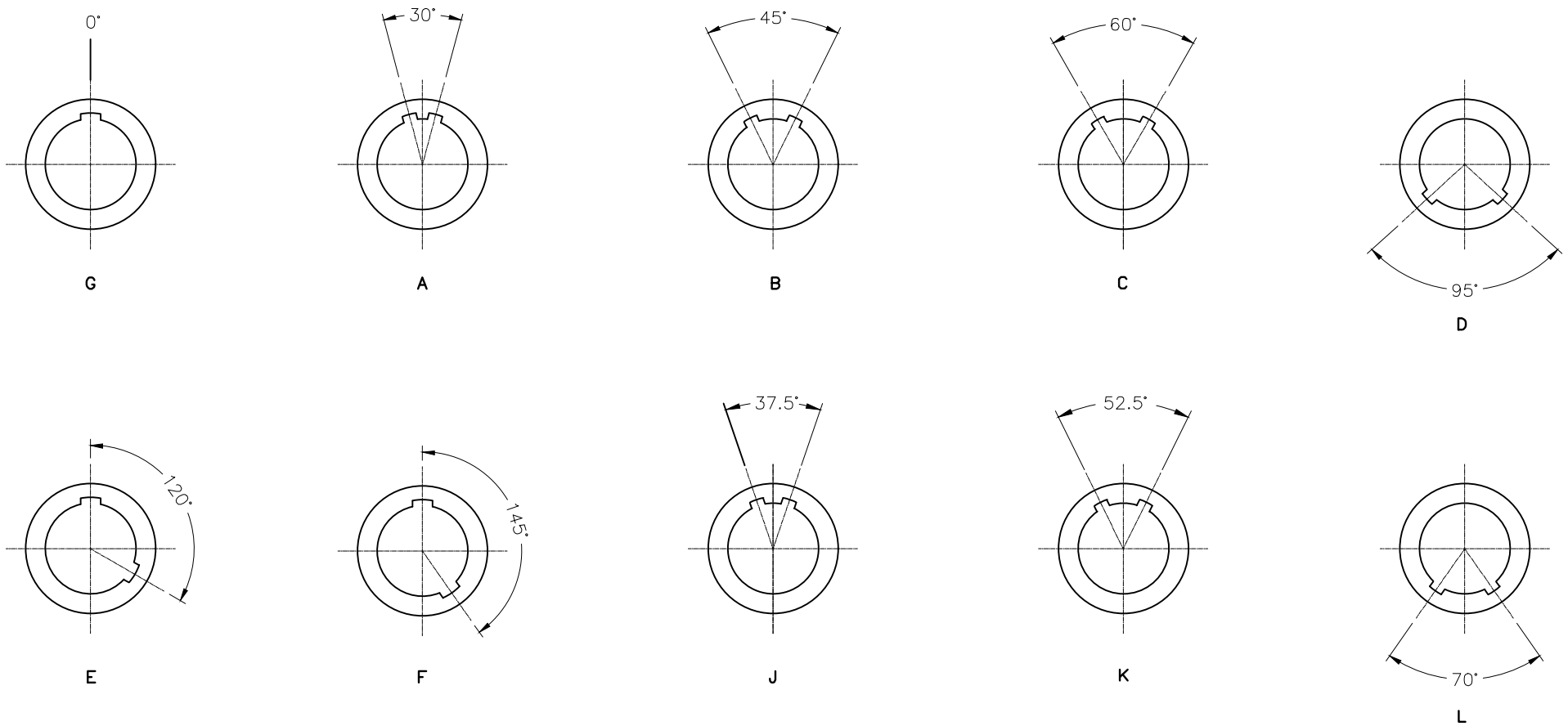

THIRD ANGLE PROJECTION		TOLERANCES UNLESS OTHERWISE SPECIFIED		Dongguan Circon Technology Co.,Ltd.			
UNITS ■ mm □ INCH		0 PLC ± 1.00 1 PLC ± 0.50 2 PLC ± 0.25 3 PLC ± 4 PLC ±		TITLE: 2B METAL CIRCULAR CONNECTOR FIXED SOCKET–PCB CONTACTS			
ANGLES 0 PLC ± 3 1 PLC ± 2							
APPROVED BY	JACK	DATE	2020–6–18	C	DRAWING NO.	A–M–167	REV. A0
CHECKED BY	CHARLES	DATE	2020–6–18		PART NO.	2BAF8XXXXXX0C	
DRAWN BY	ANDY	DATE	2020–6–18	SIZE: A3	SCALE: 1:1	SHEET: 2 OF 4	

REV.	REVISION DESCRIPTION	ECR/ECN NO.	DATE

VIEW FROM TERMINATION SIDE PIN PART

2 POS.

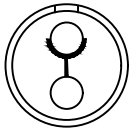

3 POS.



4 POS.

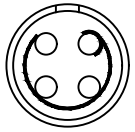

5 POS.

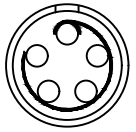

6 POS.



7 POS.

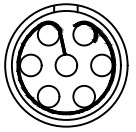

8 POS.

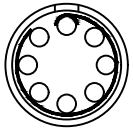

10 POS.



12 POS.



14 POS.



16 POS.



18 POS.

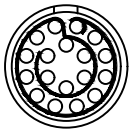

19 POS.

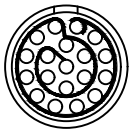

26 POS.



32 POS.

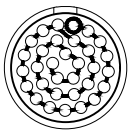

THIRD ANGLE PROJECTION		TOLERANCES UNLESS OTHERWISE SPECIFIED	
UNITS ■ mm □ INCH		0 PLC ± 1.00 1 PLC ± 0.50 2 PLC ± 0.25 3 PLC ± 4 PLC ±	
ANGLES 0 PLC ± 3 1 PLC ± 2			
APPROVED BY	JACK	DATE	2020-6-18
CHECKED BY	CHARLES	DATE	2020-6-18
DRAWN BY	ANDY	DATE	2020-6-18

Dongguan Circon Technology Co.,Ltd.

TITLE: 2B METAL CIRCULAR CONNECTOR
FIXED SOCKET-PCB CONTACTS

C	DRAWING NO.	A-M-167	REV.	A0
	PART NO.	2BAF8XXXXXX0C		

REV.	REVISION DESCRIPTION	ECR/ECN NO.	DATE

SIZE: A3 SCALE: 1:1 SHEET: 3 OF 4

PCB DRILLING PATTEN

2 POS.

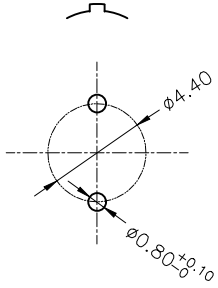

3 POS.

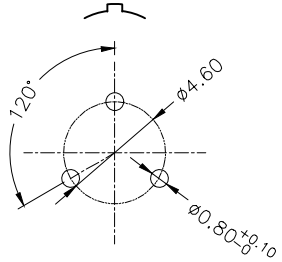

4 POS.

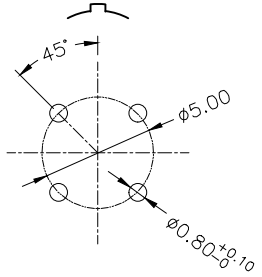

5 POS.

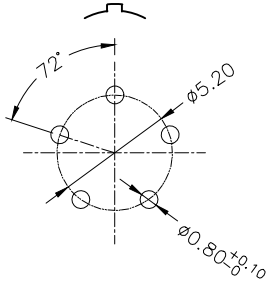

6 POS.

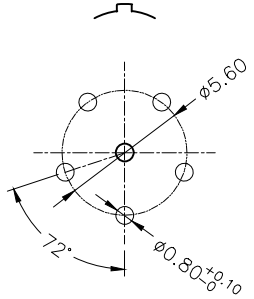

7 POS.

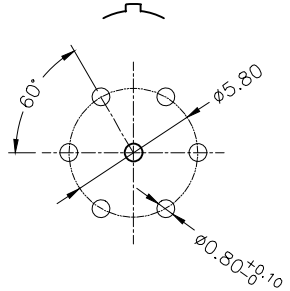

8 POS.

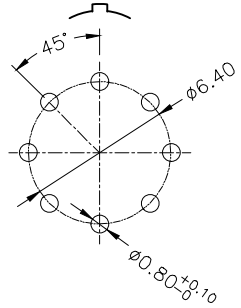

10 POS.

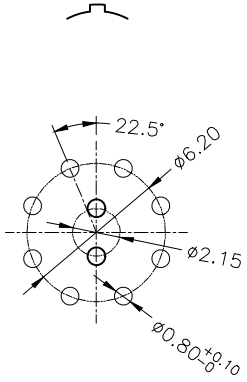

12 POS.

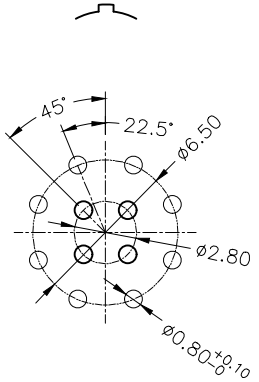

14 POS.

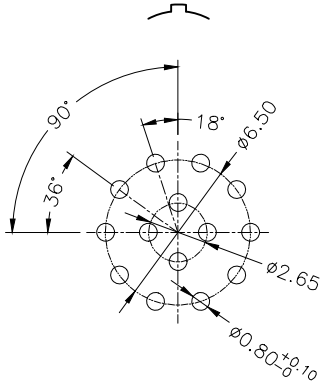

16 POS.

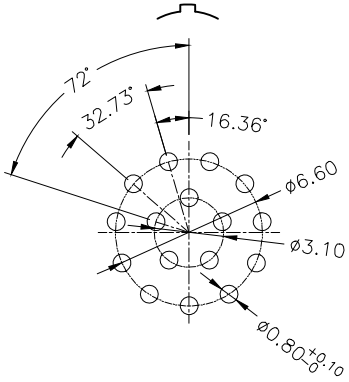

18 POS.

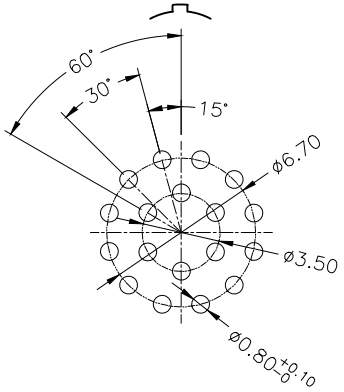

19 POS.

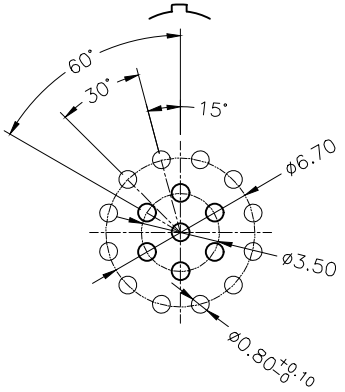

26 POS.

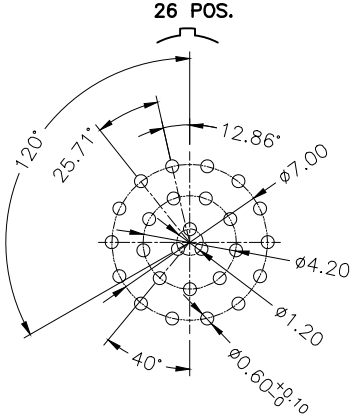

32 POS.

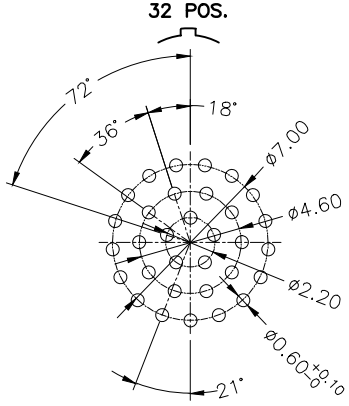

THIRD ANGLE PROJECTION	TOLERANCES UNLESS OTHERWISE SPECIFIED	Dongguan Circon Technology Co.,Ltd.	
UNITS ■ mm □ INCH	0 PLC ± 1.00 1 PLC ± 0.50 2 PLC ± 0.25 3 PLC ± 4 PLC ±	TITLE: 2B METAL CIRCULAR CONNECTOR FIXED SOCKET–PCB CONTACTS	
ANGLES 0 PLC ± 3 1 PLC ± 2		C	DRAWING NO. A–M–167 REV. A0 PART NO. 2BAF8XXXXXX0C

REV.	REVISION DESCRIPTION	ECR/ECN NO.	DATE								
				APPROVED BY	JACK	DATE	2020–6–18	SIZE: A3	SCALE: 1:1	SHEET: 4 OF 4	
				CHECKED BY	CHARLES	DATE	2020–6–18				
				DRAWN BY	ANDY	DATE	2020–6–18				