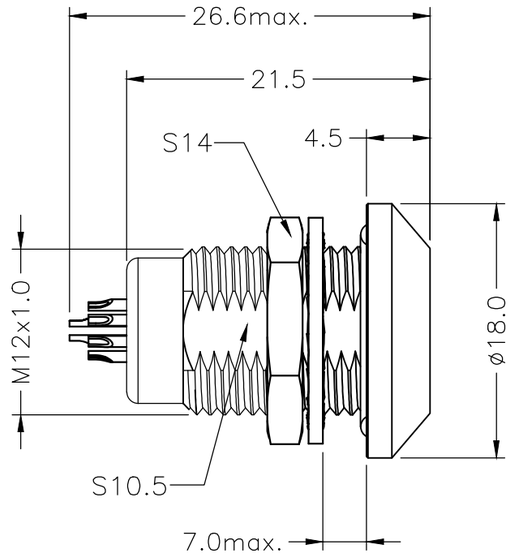

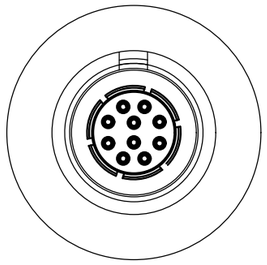

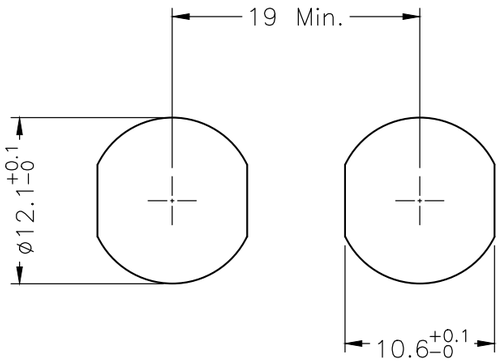

PANEL CUT–OUT

1B METAL CIRCULAR ASSEMBLY P/N DESCRIPTION :

1B A FA X X XX X 00C
①②③④

① Insert
L=PEEK
P=PPS

② Plating
2=High Gold
A=Gold flash

③ Number of contacts
02=2Pin
⋮
16=16Pin

④ Keying

G= 0°	E=145°
A= 30°	F=155°
B= 60°	J= 45°
C= 90°	K= 70°
D=135°	L= 80°

NOTE:

1. MATERIAL:

1.1.SHELL ASSEMBLY: COPPER ALLOY,OUTER SHELL Cr PLATING,
OTHER METALLIC COMPONENTS Ni PLATING

1.2.INSERT: THERMOPLASTIC,UL94V–0

1.3.CENTER CONTACT : COPPER ALLOY,Au PLATING

1.4.O–RING : ELASTOMER

2.NUMBER OF CONTACT : 2 TO 16 POSITION

3.RoHS DIRECTIVE COMPLIANCE

REV.	REVISION DESCRIPTION	ECR/ECN NO.	DATE

THIRD ANGLE PROJECTION		TOLERANCES UNLESS OTHERWISE SPECIFIED	
UNITS ■ mm □ INCH		0 PLC ± 1.00 1 PLC ± 0.50 2 PLC ± 0.25 3 PLC ± 4 PLC ±	
ANGLES 0 PLC ± 3 1 PLC ± 2			
APPROVED BY	JACK	DATE	2023–12–25
CHECKED BY	CHARLES	DATE	2023–12–25
DRAWN BY	ANDY	DATE	2023–12–25

Dongguan Circon Technology Co.,Ltd.

TITLE: 1B METAL CIRCULAR CONNECTOR
FIXED SOCKET–VACUUMTIGHT

C	DRAWING NO.	A–M–449	REV. A0
	PART NO.	1BAFAXXXXX00C	
SIZE: A3	SCALE: 1:1	SHEET: 1 OF 2	

KEYING ANGLES (RECEPTACLE FRONT VIEW):

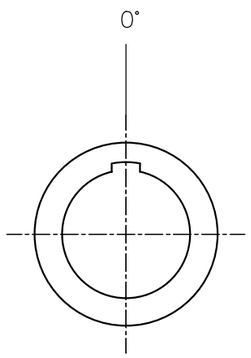

G

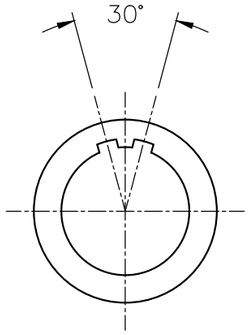

A

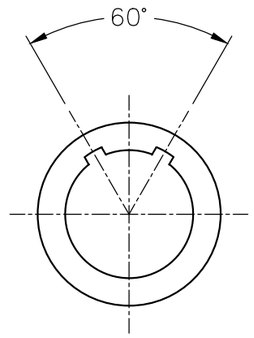

B

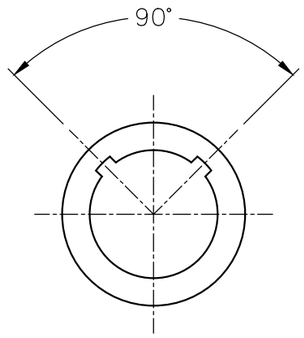

C

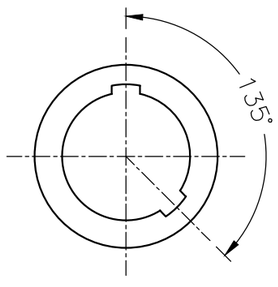

D

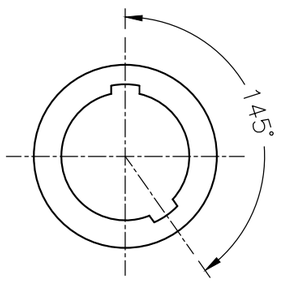

E

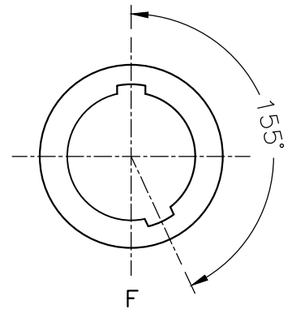

F

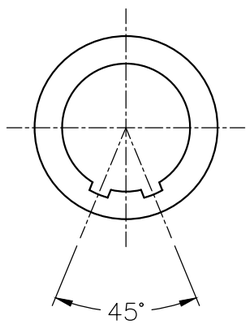

J

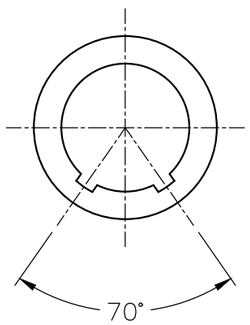

K

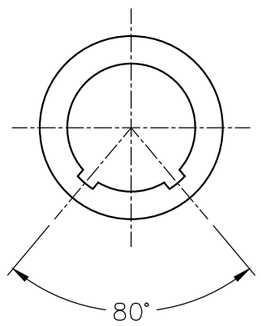

L

VIEW FROM TERMINATION SIDE PIN PART

02 PIN



03 PIN



04 PIN



05 PIN



06 PIN



07 PIN



08 PIN



10 PIN



12 PIN



14 PIN



16 PIN

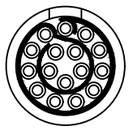

THIRD ANGLE PROJECTION		TOLERANCES UNLESS OTHERWISE SPECIFIED	
UNITS ■ mm □ INCH		0 PLC ± 1.00 1 PLC ± 0.50 2 PLC ± 0.25 3 PLC ± 4 PLC ±	
ANGLES 0 PLC ± 3 1 PLC ± 2			
APPROVED BY	JACK	DATE	2023-12-25
CHECKED BY	CHARLES	DATE	2023-12-25
DRAWN BY	ANDY	DATE	2023-12-25

CIRCON®

Dongguan Circon Technology Co.,Ltd.

TITLE: 1B METAL CIRCULAR CONNECTOR
FIXED SOCKET–VACUUMTIGHT

C	DRAWING NO.	A–M–449	REV. A0
	PART NO.	1BAFAXXXXX00C	
SIZE: A3	SCALE: 1:1	SHEET: 2 OF 2	

REV.	REVISION DESCRIPTION	ECR/ECN NO.	DATE