00 METAL CIRCULAR COAXIAL TYPE P/N DESCRIPTION :

00 A FA X X XX 200C
① ② ③

① Insert
P=PEEK

② Plating
2=High Gold
A=Gold flash

③ Insert configuration
C5=Coaxial 50 Ohm

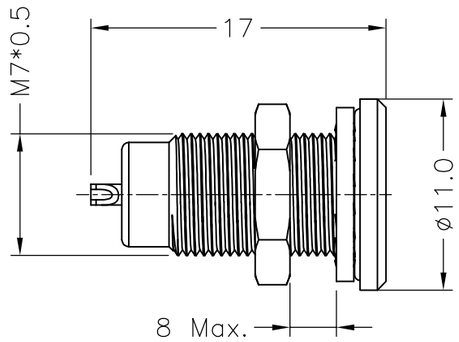

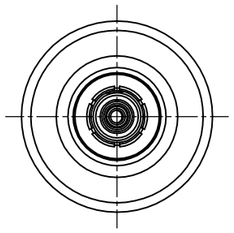

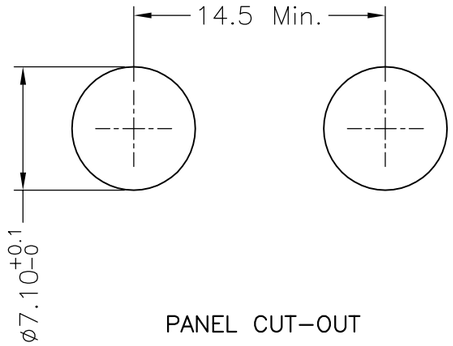

PANEL CUT-OUT

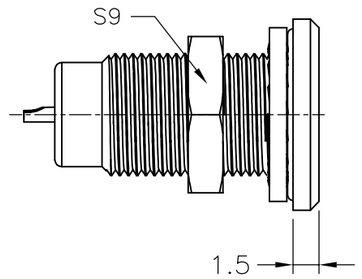

NOTE:

1. MATERIAL:

1.1.SHELL ASSEMBLY: COPPER ALLOY,OUTER SHELL Cr PLATING,
OTHER METALLIC COMPONENTS Ni PLATING

1.2.INSERT: THERMOPLASTIC,UL94V-0

1.3.CENTER CONTACT : COPPER ALLOY,Au PLATING

1.4.O-RING : ELASTOMER

2.RoHS DIRECTIVE COMPLIANCE

THIRD ANGLE PROJECTION	TOLERANCES UNLESS OTHERWISE SPECIFIED				
UNITS ■ mm □ INCH	0 PLC ± 1.00 1 PLC ± 0.50 2 PLC ± 0.25 3 PLC ± 4 PLC ±	Dongguan Circon Technology Co.,Ltd.			
ANGLES 0 PLC ± 3 1 PLC ± 2		TITLE: 00 METAL CIRCULAR CONNECTOR COAXIAL TYPE-FIXED SOCKET			
APPROVED BY	JACK	DATE	2023-2-18	C	REV. A0
CHECKED BY	CHARLES	DATE	2023-2-18	DRAWING NO. A-M-364	
DRAWN BY	ANDY	DATE	2023-2-18	PART NO. 00AFAXXXXX00C	
SIZE: A3	SCALE: 1:1	SHEET: 1 OF 1			

REV.	REVISION DESCRIPTION	ECR/ECN NO.	DATE