NOTE:

1. MATERIAL:

1.1.SHELL ASSEMBLY: COPPER ALLOY,OUTER SHELL AND COLLET NUT Cr PLATING, OTHER METALLIC COMPONENTS Ni PLATING

1.2.INSERT: THERMOPLASTIC,UL94V-0

1.3.CENTER CONTACT : COPPER ALLOY,Au PLATING

2.NUMBER OF CONTACT : 5&7 POSITION

3.RoHS DIRECTIVE COMPLIANCE

0B METAL CIRCULAR ASSEMBLY P/N DESCRIPTION :

0B A FB X X XX X 000
① ② ③ ④

① Insert
P=PEEK
1=PPS

② Plating
2=High Gold
A=Gold flash

③ Number of contacts
05=5Pin
07=7Pin

④ Keying

G= 0°	D= 135°	K= 70°
A= 30°	E= 145°	L= 80°
B= 60°	F= 155°	M=110°
C= 90°	J= 45°	

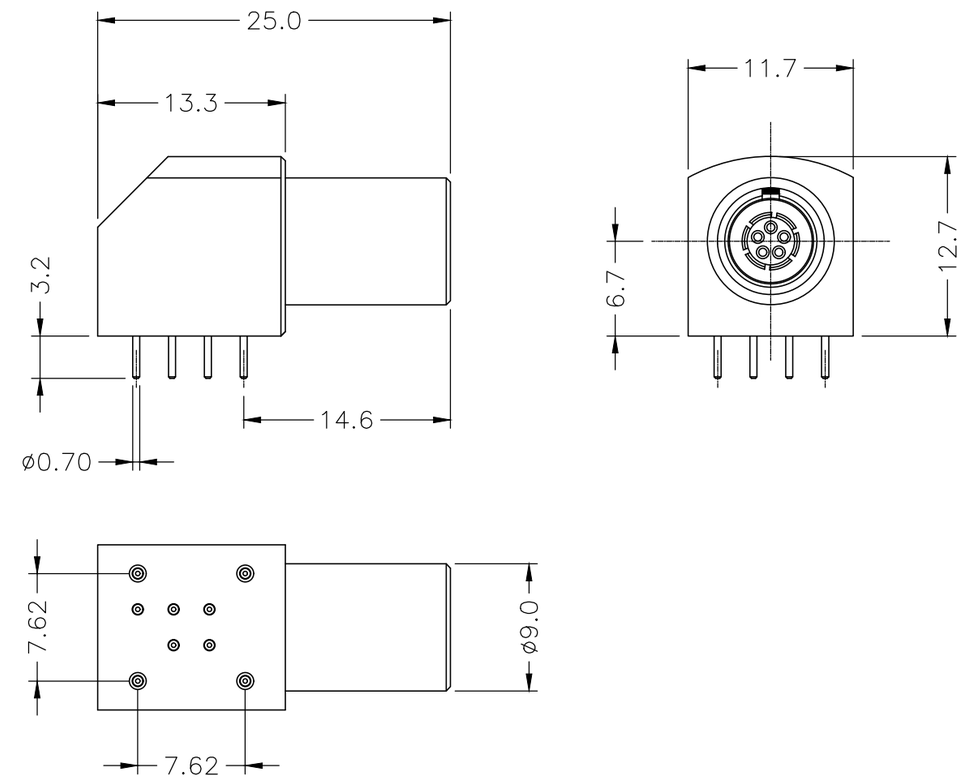

VIEW FROM TERMINATION SIDE PIN PART:

05 PIN



07 PIN



THIRD ANGLE PROJECTION		TOLERANCES UNLESS OTHERWISE SPECIFIED		Dongguan Circon Technology Co.,Ltd.	
UNITS ■ mm □ INCH		0 PLC ± 1.00 1 PLC ± 0.50 2 PLC ± 0.25 3 PLC ± 4 PLC ±		TITLE: 0B METAL CIRCULAR CONNECTOR 90° FIXED SOCKET	
ANGLES 0 PLC ± 3 1 PLC ± 2				C	DRAWING NO. A-M-134 / PART NO. 0BAFBXXXXX000 / REV. A0
APPROVED BY	JACK	DATE	2020-8-17		
CHECKED BY	CHARLES	DATE	2020-8-17		
DRAWN BY	ANDY	DATE	2020-8-17	SIZE: A3	SCALE: 1:1 / SHEET: 1 OF 2

REV.	REVISION DESCRIPTION	ECR/ECN NO.	DATE

KEYING ANGLES (RECEPTACLE FRONT VIEW):

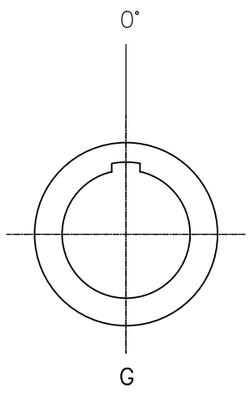

G

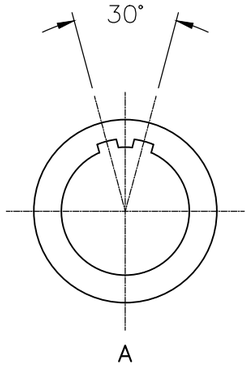

A

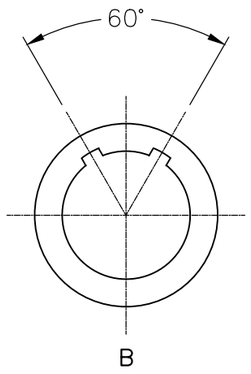

B

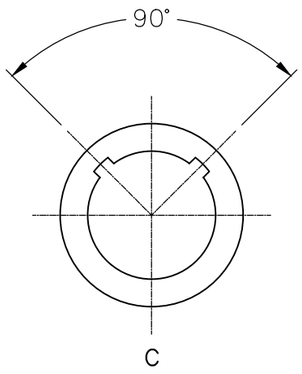

C

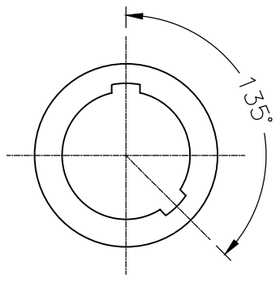

D

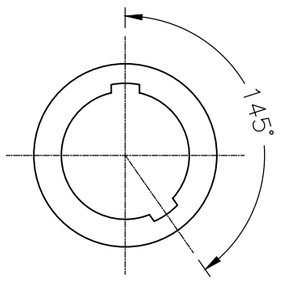

E

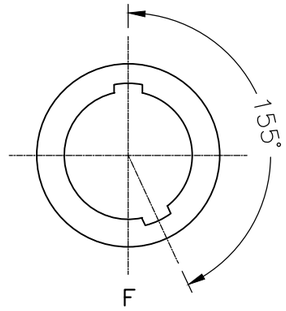

F

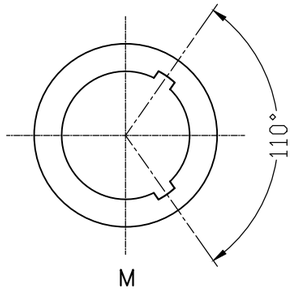

M

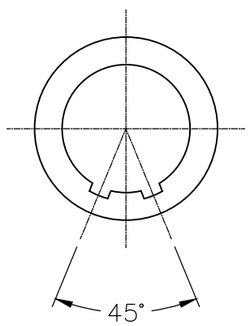

J

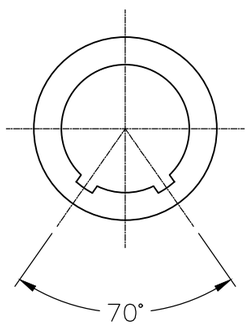

K

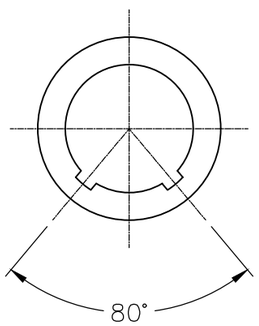

L

PCB DRILLING PATTERN:

05 PIN

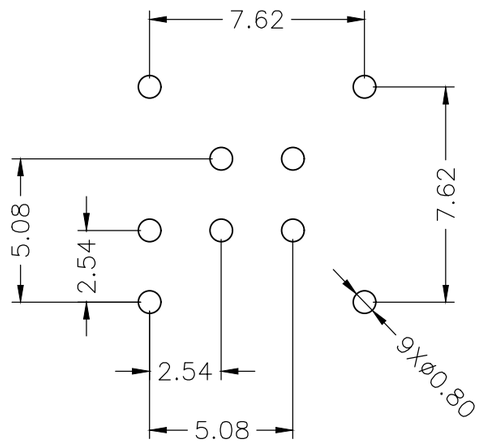

07 PIN

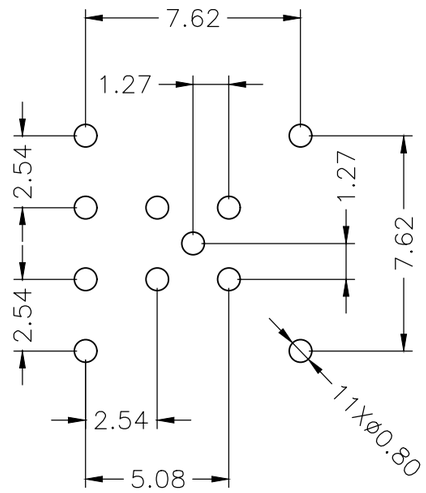

THIRD ANGLE PROJECTION	TOLERANCES UNLESS OTHERWISE SPECIFIED
UNITS ■ mm □ INCH	0 PLC ± 1.00 1 PLC ± 0.50 2 PLC ± 0.25 3 PLC ± 4 PLC ±
ANGLES 0 PLC ± 3 1 PLC ± 2	

Dongguan Circon Technology Co.,Ltd.

TITLE: 0B METAL CIRCULAR CONNECTOR 90° FIXED SOCKET

APPROVED BY	JACK	DATE	2020-8-17	C	DRAWING NO. A-M-134 REV. A0
CHECKED BY	CHARLES	DATE	2020-8-17		PART NO. 0BAFBXXXXX000
DRAWN BY	ANDY	DATE	2020-8-17	SIZE: A3	SCALE: 1:1 SHEET: 2 OF 2

REV.	REVISION DESCRIPTION	ECR/ECN NO.	DATE