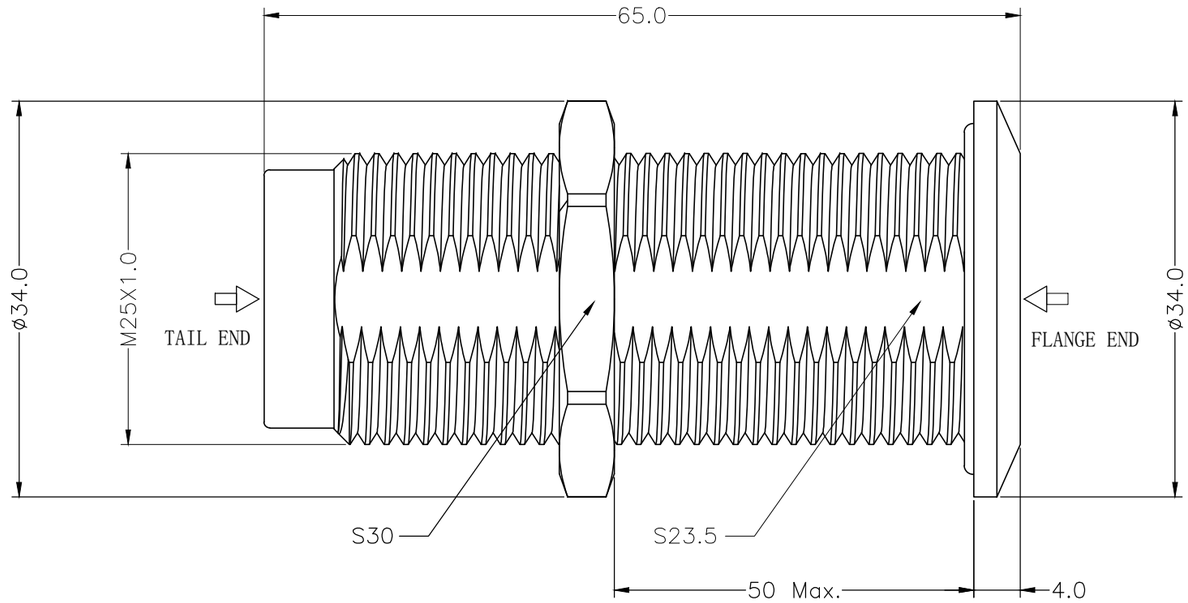

4B METAL CIRCULAR ASSEMBLY P/N DESCRIPTION :

4B A FB X X XX XX 0C
① ② ③ ④

① Insert

P=PEEK

1=PPS

② Plating

2=High Gold

A=Gold flash

③ Number of contacts

04=4Pin

⋮

48=48Pin

④ Keying and contact type

AK=Flange end 30° socket contact/tail end 52.5° male contact

BL=Flange end 45° socket contact/tail end 70° male contact

GJ=Flange end 0° socket contact/tail end 37.5° male contact

JG=Flange end 37.5° male contact/tail end 0° socket contact

NOTE:

1. MATERIAL:

1.1.SHELL ASSEMBLY: COPPER ALLOY,OUTER SHELL Cr PLATING, OTHER METALLIC COMPONENTS Ni PLATING

1.2.INSERT: THERMOPLASTIC,UL94V–0

1.3.CENTER CONTACT : COPPER ALLOY,Au PLATING

1.4.O–RING : ELASTOMER

2.NUMBER OF CONTACT : 4 TO 48 POSITION

3.RoHS DIRECTIVE COMPLIANCE

REV.	REVISION DESCRIPTION	ECR/ECN NO.	DATE

THIRD ANGLE PROJECTION

UNITS ■ mm □ INCH

ANGLES 0 PLC ± 3°
1 PLC ± 2°

TOLERANCES UNLESS OTHERWISE SPECIFIED

0 PLC ± 1.00
1 PLC ± 0.50
2 PLC ± 0.25
3 PLC ±
4 PLC ±

APPROVED BY	JACK	DATE	2022–10–31
CHECKED BY	CHARLES	DATE	2022–10–31
DRAWN BY	ANDY	DATE	2022–10–31

Dongguan Circon Technology Co.,Ltd.

TITLE: 4B METAL CIRCULAR CONNECTOR FIXED COUPLER

C	DRAWING NO.	A–M–189	REV. A0
	PART NO.	4BAFBXXXXXXC	

SIZE: A3 | SCALE: 1:1 | SHEET: 1 OF 2

KEYING (PLUG FRONT VIEW):

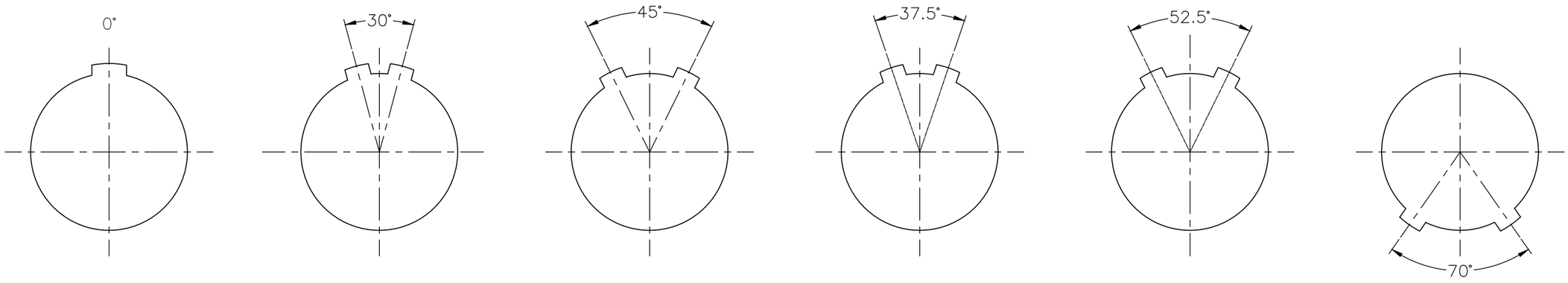

VIEW FROM TERMINATION SIDE PIN PART

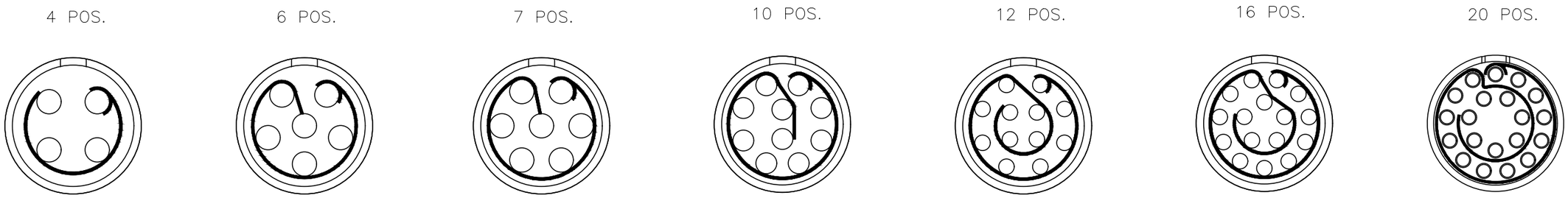

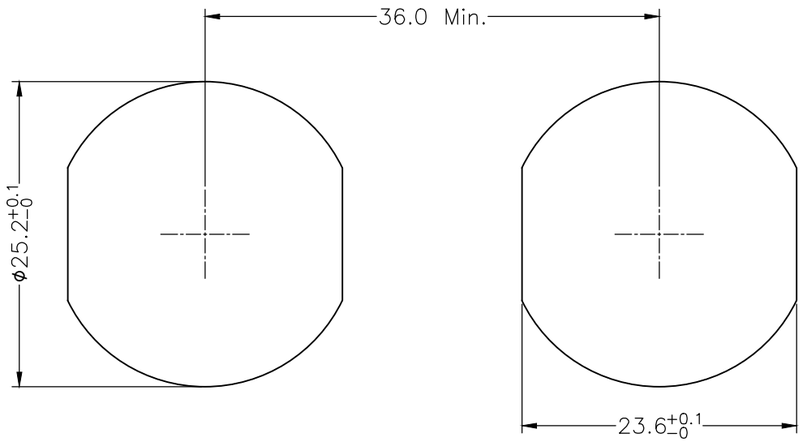

PANEL CUT-OUT

THIRD ANGLE PROJECTION		TOLERANCES UNLESS OTHERWISE SPECIFIED	0 PLC ± 1.00 1 PLC ± 0.50 2 PLC ± 0.25 3 PLC ± 4 PLC ±
UNITS ■ mm □ INCH			
ANGLES 0 PLC ± 3° 1 PLC ± 2°			
APPROVED BY	JACK	DATE	2022-10-31
CHECKED BY	CHARLES	DATE	2022-10-31
DRAWN BY	ANDY	DATE	2022-10-31

Dongguan Circon Technology Co.,Ltd.

TITLE: 4B METAL CIRCULAR CONNECTOR FIXED COUPLER

C	DRAWING NO.	A-M-189	REV. A0
	PART NO.	4BAFBXXXXXXXC	

REV.	REVISION DESCRIPTION	ECR/ECN NO.	DATE

SIZE: A3 | SCALE: 1:1 | SHEET: 2 OF 2