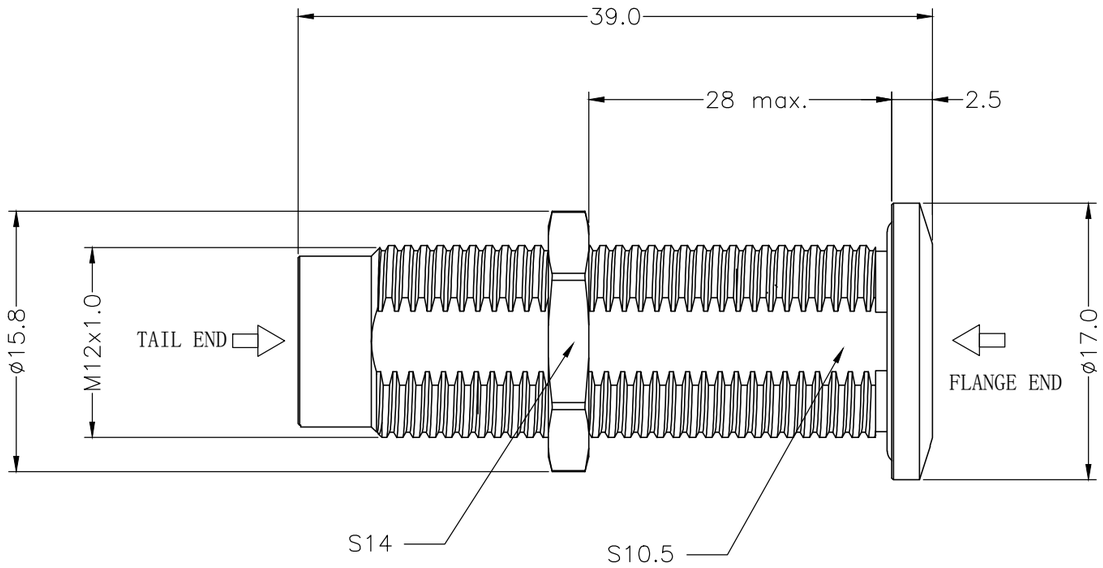

1B METAL CIRCULAR ASSEMBLY P/N DESCRIPTION :

1B A FB X X XX XX 0C
① ② ③ ④

① Insert

P=PEEK

1=PPS

② Plating

2=High Gold

A=Gold flash

③ Number of contacts

02=2Pin

⋮

16=16Pin

④ Keying and contact type

GJ=Flange end 0° socket contact/tail end 45° male contact

JG=Flange end 45° male contact/tail end 0° socket contact

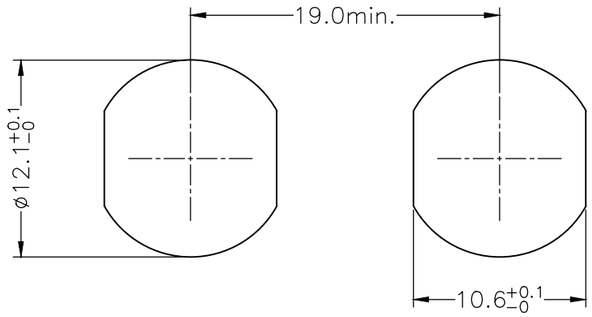

PANEL CUT-OUT

NOTE:

1. MATERIAL:

1.1.SHELL ASSEMBLY: COPPER ALLOY,OUTER SHELL Cr PLATING,
OTHER METALLIC COMPONENTS Ni PLATING

1.2.INSERT: THERMOPLASTIC,UL94V-0

1.3.CENTER CONTACT : COPPER ALLOY,Au PLATING

1.4.O-RING : ELASTOMER

2.NUMBER OF CONTACT : 2 TO 16 POSITION

3.RoHS DIRECTIVE COMPLIANCE

REV.	REVISION DESCRIPTION	ECR/ECN NO.	DATE

THIRD ANGLE PROJECTION		TOLERANCES UNLESS OTHERWISE SPECIFIED	
UNITS ■ mm □ INCH		0 PLC ± 1.00 1 PLC ± 0.50 2 PLC ± 0.25 3 PLC ± 4 PLC ±	
ANGLES 0 PLC ± 3° 1 PLC ± 2°			
APPROVED BY	JACK	DATE	2022-11-29
CHECKED BY	CHARLES	DATE	2022-11-29
DRAWN BY	ANDY	DATE	2022-11-29

CIRCON®

Dongguan Circon Technology Co.,Ltd.

TITLE: 1B METAL CIRCULAR CONNECTOR FIXED COUPLER

C	DRAWING NO.	A-M-215	REV. A0
	PART NO.	1BAFBXXXXXXC	
SIZE: A3	SCALE: 1:1	SHEET: 1 OF 2	

VIEW FROM TERMINATION SIDE PIN PART

2 POS.

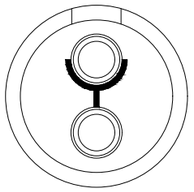

3 POS.

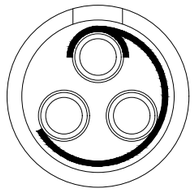

4 POS.

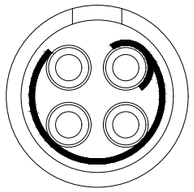

5 POS.

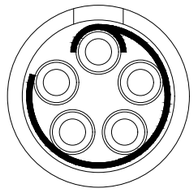

6 POS.

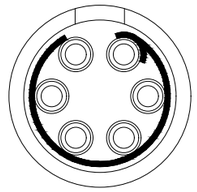

7 POS.

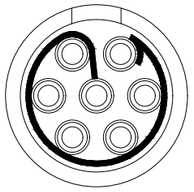

8 POS.

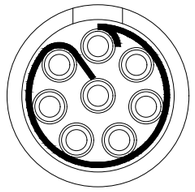

10 POS.

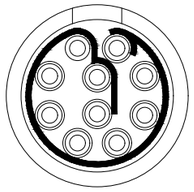

14 POS.

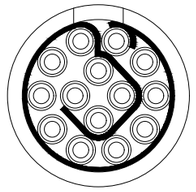

16 POS.

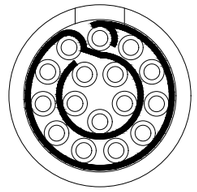

KEYING (PLUG FRONT VIEW):

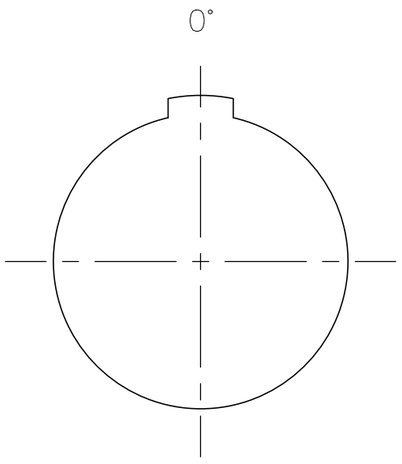

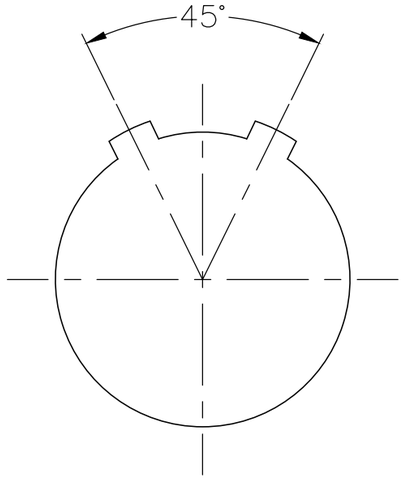

THIRD ANGLE PROJECTION		TOLERANCES UNLESS OTHERWISE SPECIFIED		Dongguan Circon Technology Co.,Ltd.			
UNITS ■ mm □ INCH		0 PLC ± 1.00 1 PLC ± 0.50 2 PLC ± 0.25 3 PLC ± 4 PLC ±		TITLE: 1B METAL CIRCULAR CONNECTOR FIXED COUPLER			
ANGLES 0 PLC ± 3° 1 PLC ± 2°				C	DRAWING NO.	A-M-215	REV. A0
APPROVED BY	JACK	DATE	2022-11-29		PART NO.	1BAFBXXXXXXXC	
CHECKED BY	CHARLES	DATE	2022-11-29				
DRAWN BY	ANDY	DATE	2022-11-29	SIZE: A3	SCALE: 1:1	SHEET: 2 OF 2	

REV.	REVISION DESCRIPTION	ECR/ECN NO.	DATE