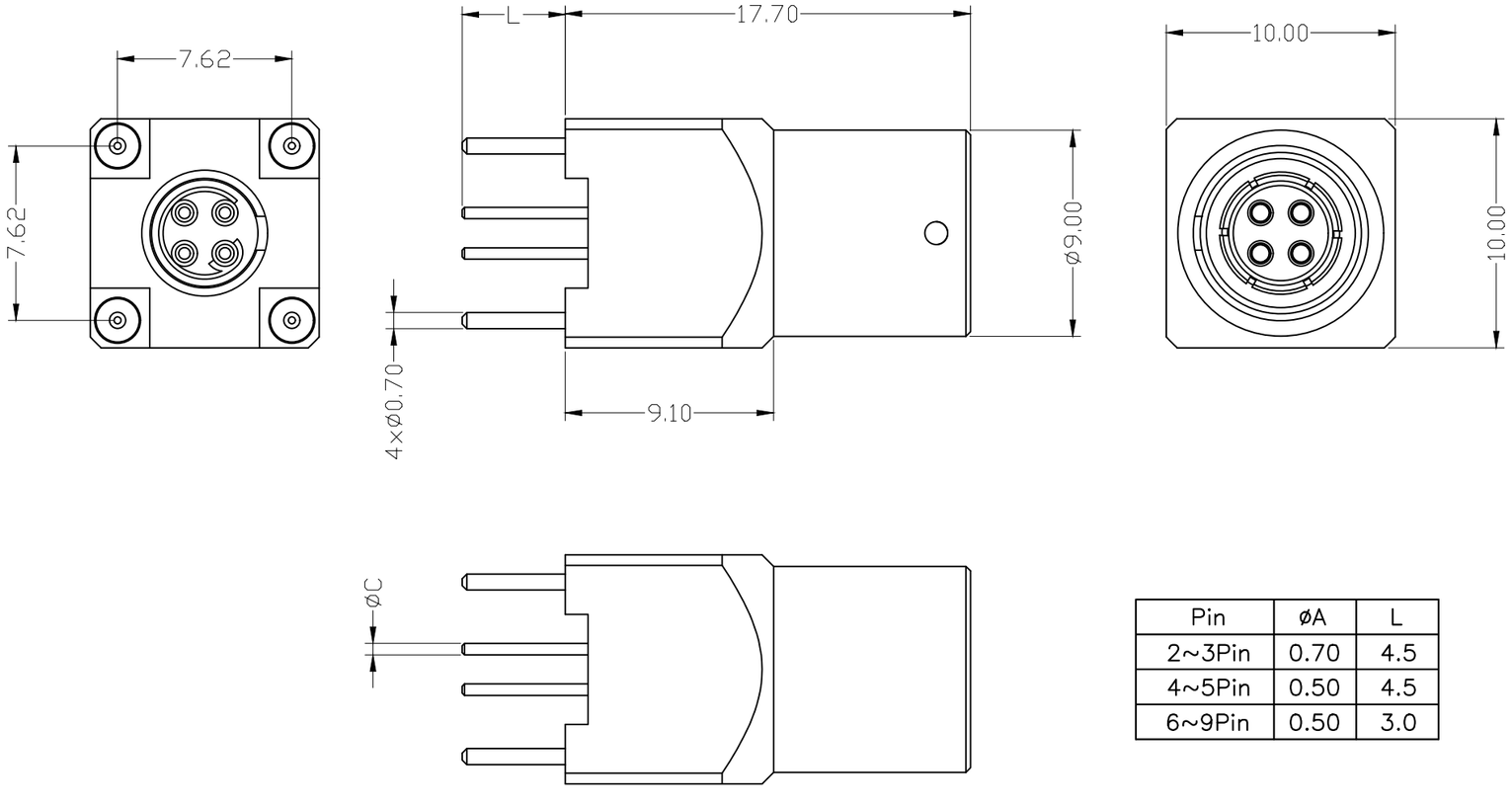

Pin	øA	L
2~3Pin	0.70	4.5
4~5Pin	0.50	4.5
6~9Pin	0.50	3.0

0B METAL CIRCULAR ASSEMBLY P/N DESCRIPTION :

0B A FD X X XX X 00C
①②③④

① Insert
P=PEEK
1=PPS

② Plating
2=High Gold
A=Gold flash

③ Number of contacts
02=2Pin
⋮
09=9Pin

④ Keying

G= 0°	E= 145°
A= 30°	F= 155°
B= 60°	J= 45°
C= 90°	K= 70°
D= 135°	L= 80°

NOTE:

1. MATERIAL:

1.1.SHELL ASSEMBLY: COPPER ALLOY,OUTER SHELL Cr PLATING,
OTHER METALLIC COMPONENTS Ni PLATING

1.2.INSERT: THERMOPLASTIC,UL94V-0

1.3.CENTER CONTACT : COPPER ALLOY,Au PLATING

2.NUMBER OF CONTACT : 2 TO 9 POSITION

3.RoHS DIRECTIVE COMPLIANCE

REV.	REVISION DESCRIPTION	ECR/ECN NO.	DATE

THIRD ANGLE PROJECTION

UNITS ■ mm □ INCH

ANGLES 0 PLC ± 3
1 PLC ± 2

TOLERANCES UNLESS OTHERWISE SPECIFIED
0 PLC ± 1.00
1 PLC ± 0.50
2 PLC ± 0.25
3 PLC ±
4 PLC ±

APPROVED BY	JACK	DATE	2025-8-26
CHECKED BY	CHARLES	DATE	2025-8-26
DRAWN BY	ANDY	DATE	2025-8-26

Dongguan Circon Technology Co.,Ltd.

TITLE: 0B METAL CIRCULAR CONNECTOR
FIXED SOCKET-PCB CONTACTS

C	DRAWING NO.	A-M-278	REV. A0
	PART NO.	0BAFDXXXXX00C	

SIZE: A3 | SCALE: 1:1 | SHEET: 1 OF 3

KEYING ANGLES (RECEPTACLE FRONT VIEW):

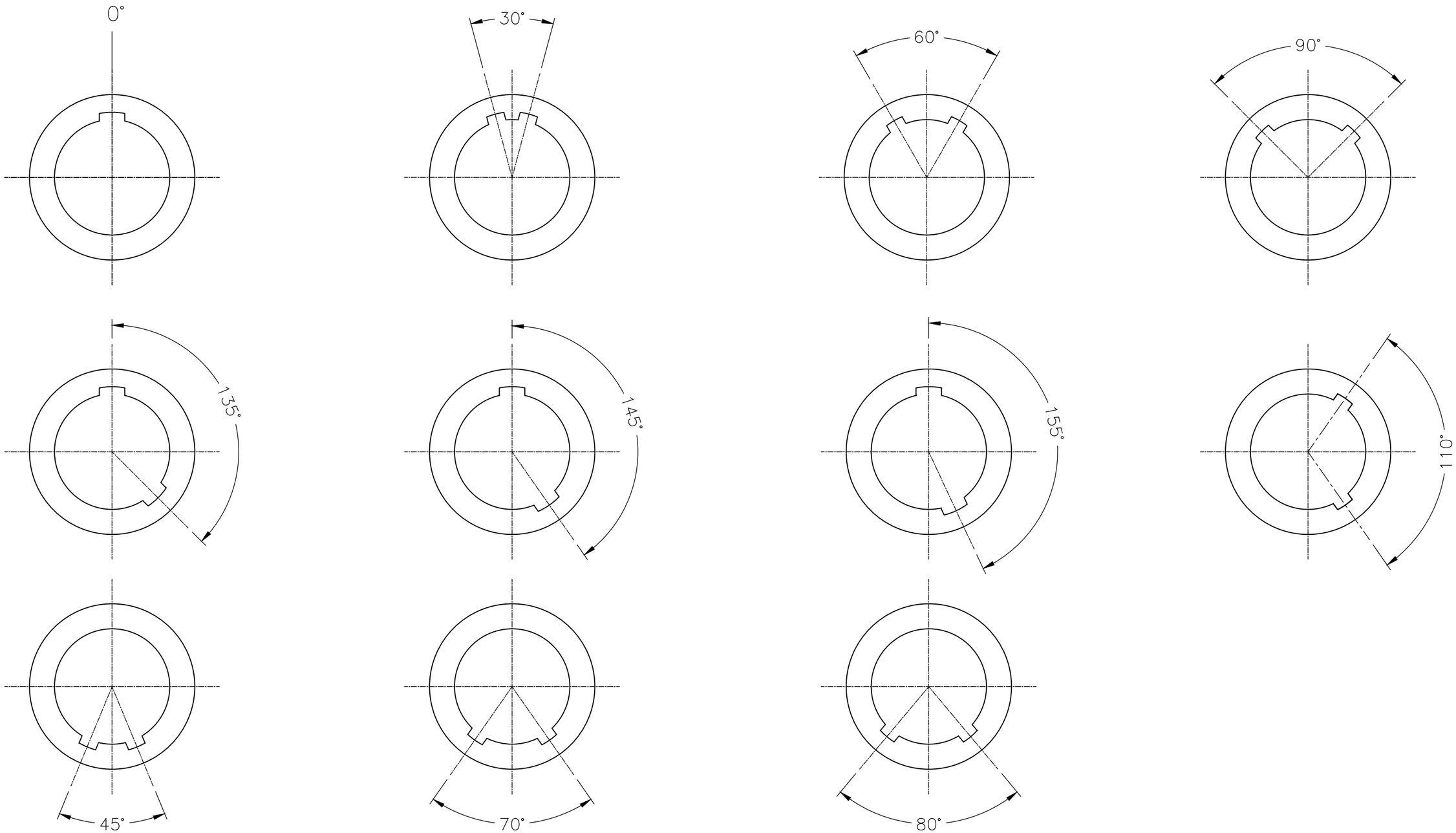

THIRD ANGLE PROJECTION	TOLERANCES UNLESS OTHERWISE SPECIFIED		
UNITS ■ mm □ INCH	0 PLC ± 1.00 1 PLC ± 0.50 2 PLC ± 0.25 3 PLC ± 4 PLC ±		
ANGLES 0 PLC ± 3 1 PLC ± 2			

CIRCON®

Dongguan Circon Technology Co.,Ltd.

TITLE: 0B METAL CIRCULAR CONNECTOR FIXED SOCKET–PCB CONTACTS

APPROVED BY	JACK	DATE	2025–8–26	C	DRAWING NO.	A–M–278	REV. A0
CHECKED BY	CHARLES	DATE	2025–8–26		PART NO.	0BAFDXXXXX00C	
DRAWN BY	ANDY	DATE	2025–8–26	SIZE: A3	SCALE: 1:1	SHEET: 2 OF 3	

REV.	REVISION DESCRIPTION	ECR/ECN NO.	DATE

VIEW FROM TERMINATION SIDE PIN PART

02 PIN

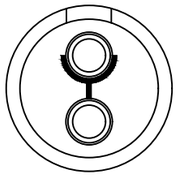

03 PIN

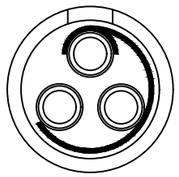

04 PIN

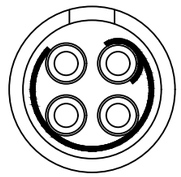

05 PIN

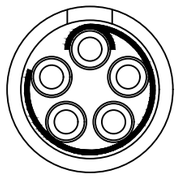

06 PIN

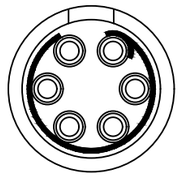

07 PIN

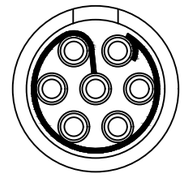

9 PIN

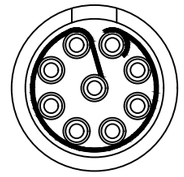

PCB DRILLING PATTERN:

02PIN

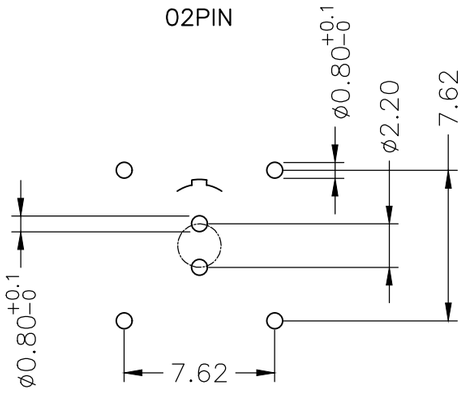

03PIN

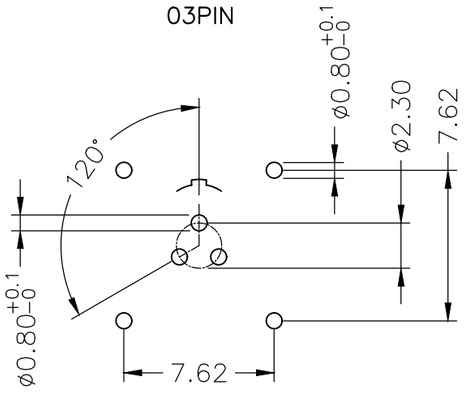

04PIN

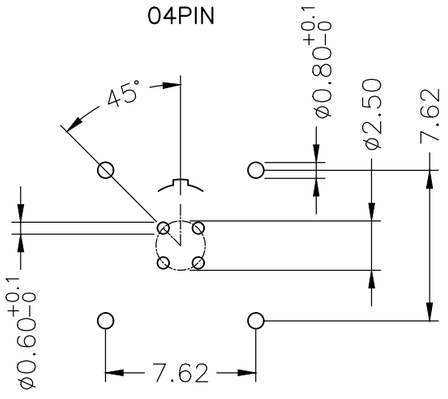

05PIN

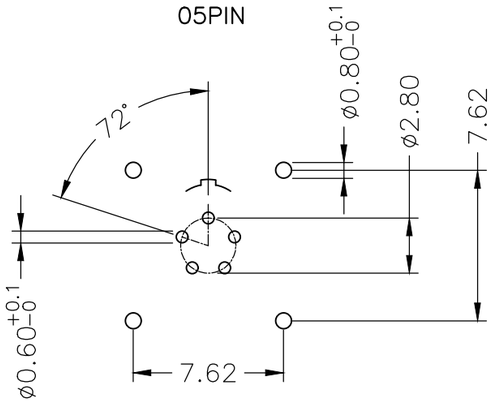

06PIN

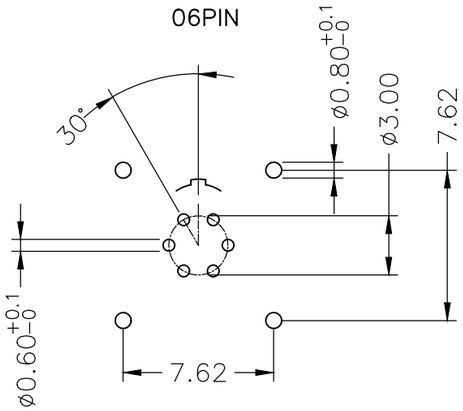

07PIN

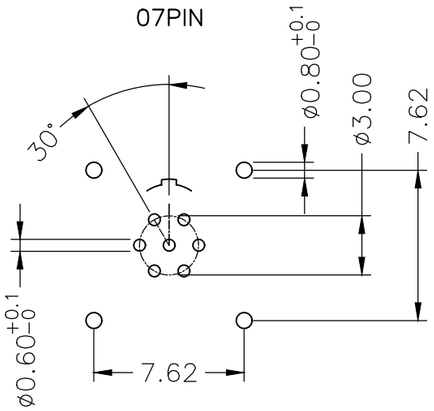

09PIN

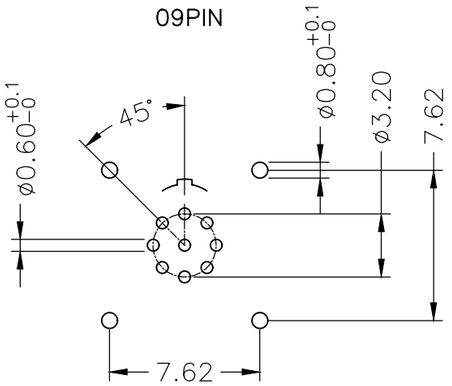

THIRD ANGLE PROJECTION	TOLERANCES UNLESS OTHERWISE SPECIFIED
UNITS ■ mm □ INCH	0 PLC ± 1.00 1 PLC ± 0.50 2 PLC ± 0.25 3 PLC ± 4 PLC ±
ANGLES 0 PLC ± 3 1 PLC ± 2	

Dongguan Circon Technology Co.,Ltd.

TITLE: 0B METAL CIRCULAR CONNECTOR
FIXED SOCKET–PCB CONTACTS

APPROVED BY	JACK	DATE	2025–8–26	C	DRAWING NO. A–M–278 REV. A0
CHECKED BY	CHARLES	DATE	2025–8–26		PART NO. 0BAFDXXXXX00C
DRAWN BY	ANDY	DATE	2025–8–26	SIZE: A3	SCALE: 1:1 SHEET: 3 OF 3

REV.	REVISION DESCRIPTION	ECR/ECN NO.	DATE