

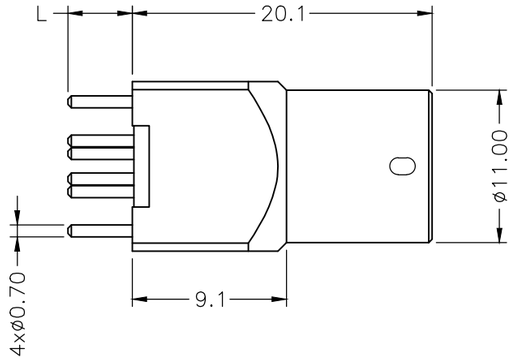

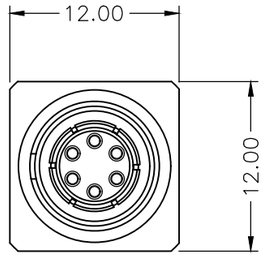

Pin	øA	L
2~8Pin	0.70	3.8
10~16Pin	0.50	3.8

1B METAL CIRCULAR ASSEMBLY P/N DESCRIPTION :

1B A FD X X XX X 00C
①②③④

① Insert
P=PEEK
1=PPS

② Plating
2=High Gold
A=Gold flash

③ Number of contacts
02=2Pin
⋮
16=16Pin

④ Keying

G= 0°	E=145°
A= 30°	F=155°
B= 60°	J= 45°
C= 90°	K= 70°
D=135°	L= 80°

NOTE:

1. MATERIAL:

1.1.SHELL ASSEMBLY: COPPER ALLOY,OUTER SHELL Cr PLATING, OTHER METALLIC COMPONENTS Ni PLATING

1.2.INSERT: THERMOPLASTIC,UL94V–0

1.3.CENTER CONTACT : COPPER ALLOY,Au PLATING

2.NUMBER OF CONTACT : 2 TO 16 POSITION

3.RoHS DIRECTIVE COMPLIANCE

REV.	REVISION DESCRIPTION	ECR/ECN NO.	DATE

THIRD ANGLE PROJECTION

UNITS ■ mm □ INCH

ANGLES 0 PLC ± 3
1 PLC ± 2

TOLERANCES UNLESS OTHERWISE SPECIFIED
0 PLC ± 1.00
1 PLC ± 0.50
2 PLC ± 0.25
3 PLC ±
4 PLC ±

APPROVED BY	JACK	DATE	2025–5–26
CHECKED BY	CHARLES	DATE	2025–5–26
DRAWN BY	ANDY	DATE	2025–5–26

Dongguan Circon Technology Co.,Ltd.

TITLE: 1B METAL CIRCULAR CONNECTOR FIXED SOCKET–PCB CONTACTS

C	DRAWING NO.	A–M–593	REV. A0
	PART NO.	1BAFDXXXXX00C	

SIZE: A3 | SCALE: 1:1 | SHEET: 1 OF 3

KEYING ANGLES (RECEPTACLE FRONT VIEW):

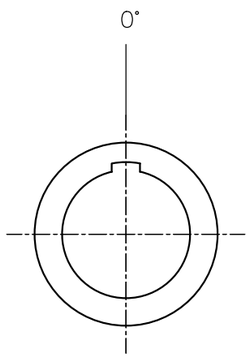

G

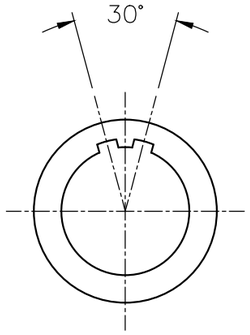

A

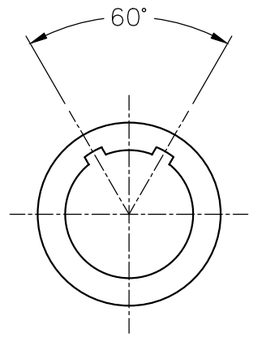

B

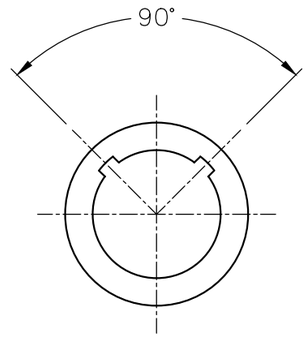

C

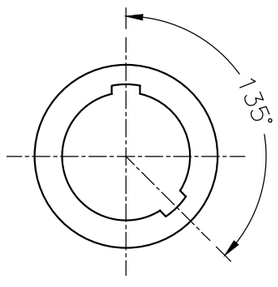

D

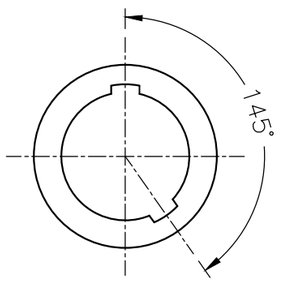

E

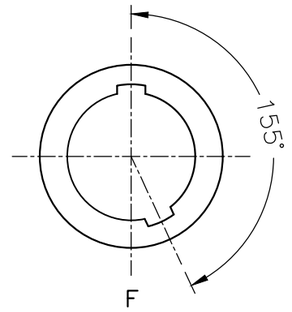

F

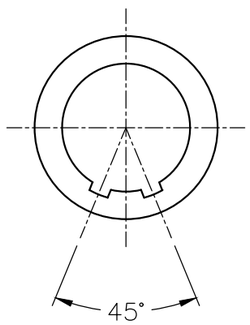

J

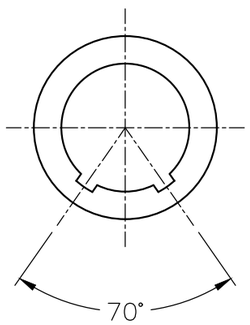

K

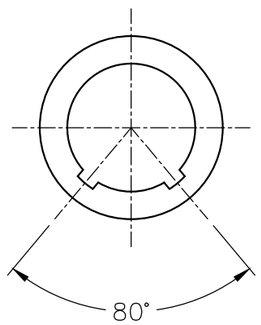

L

VIEW FROM TERMINATION SIDE PIN PART

02 PIN



03 PIN



04 PIN



05 PIN



06 PIN



07 PIN



08 PIN



10 PIN



12 PIN



14 PIN



16 PIN

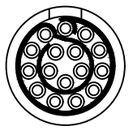

THIRD ANGLE PROJECTION		TOLERANCES UNLESS OTHERWISE SPECIFIED	
UNITS ■ mm □ INCH		0 PLC ± 1.00 1 PLC ± 0.50 2 PLC ± 0.25 3 PLC ± 4 PLC ±	
ANGLES 0 PLC ± 3 1 PLC ± 2			
APPROVED BY	JACK	DATE	2025-5-26
CHECKED BY	CHARLES	DATE	2025-5-26
DRAWN BY	ANDY	DATE	2025-5-26

CIRCON®

Dongguan Circon Technology Co.,Ltd.

TITLE: 1B METAL CIRCULAR CONNECTOR FIXED SOCKET-PCB CONTACTS

C	DRAWING NO.	A-M-593	REV. A0
	PART NO.	1BAFDXXXXX00C	
SIZE: A3	SCALE: 1:1	SHEET: 2 OF 3	

REV.	REVISION DESCRIPTION	ECR/ECN NO.	DATE

PCB DRILLING PATTERN:

2 POS.

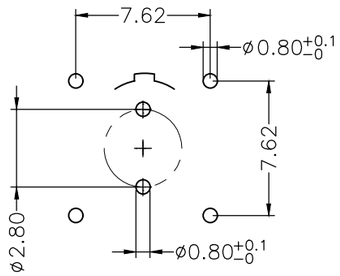

3 POS.

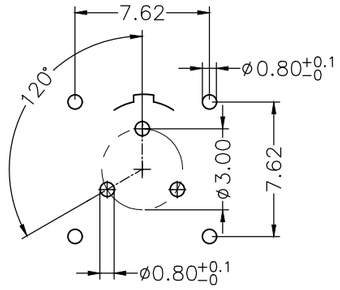

4 POS.

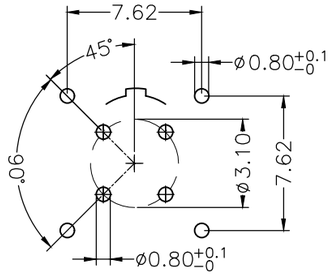

5 POS.

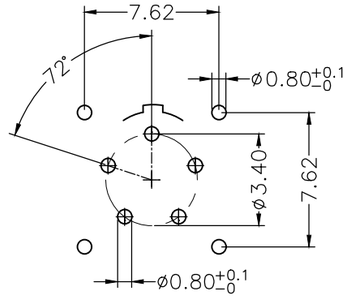

6 POS.

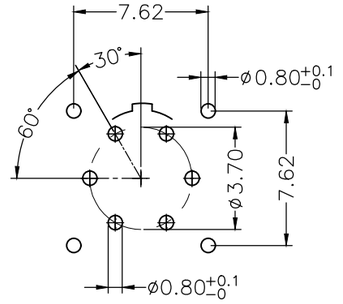

7 POS.

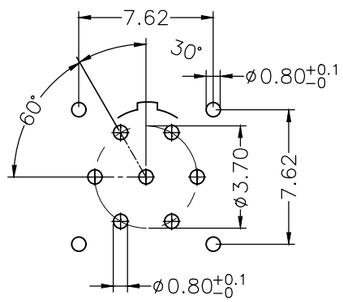

8 POS.

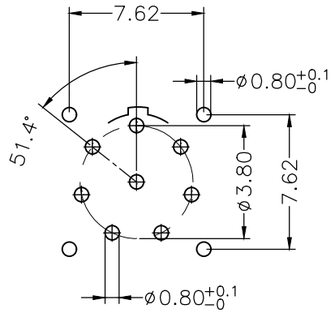

10 POS.

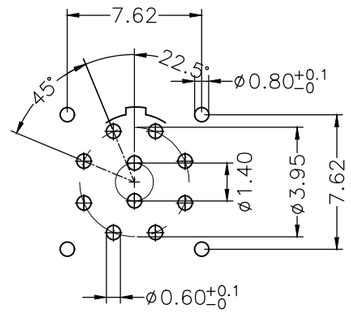

12 POS.

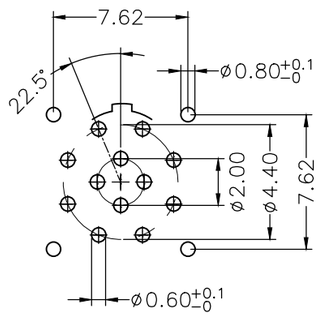

14 POS.

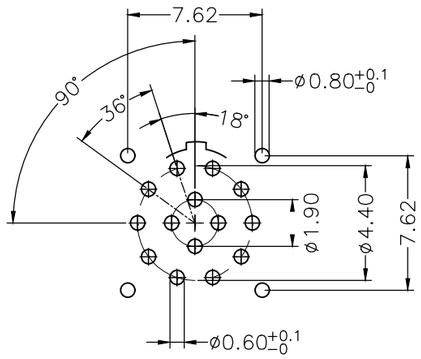

16 POS.

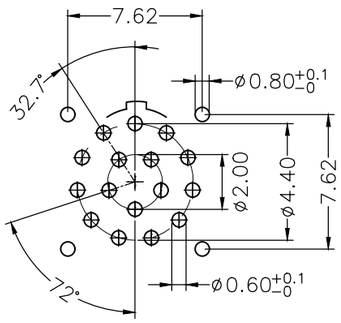

THIRD ANGLE PROJECTION	TOLERANCES UNLESS OTHERWISE SPECIFIED
UNITS ■ mm □ INCH	0 PLC ± 1.00 1 PLC ± 0.50 2 PLC ± 0.25 3 PLC ± 4 PLC ±
ANGLES 0 PLC ± 3 1 PLC ± 2	

Dongguan Circon Technology Co.,Ltd.

TITLE: 1B METAL CIRCULAR CONNECTOR FIXED SOCKET–PCB CONTACTS

APPROVED BY	JACK	DATE	2025–5–26
CHECKED BY	CHARLES	DATE	2025–5–26
DRAWN BY	ANDY	DATE	2025–5–26

C	DRAWING NO. A–M–593	REV. A0
	PART NO. 1BAFDXXXXX00C	

SIZE: A3 | SCALE: 1:1 | SHEET: 3 OF 3

REV.	REVISION DESCRIPTION	ECR/ECN NO.	DATE