00 METAL CIRCULAR COAXIAL TYPE P/N DESCRIPTION :

00 A FD X X XX 100C
① ② ③

① Insert
P=PEEK

② Plating
2=High Gold
A=Gold flash

③ Insert configuration
C5=Coaxial 50 Ohm

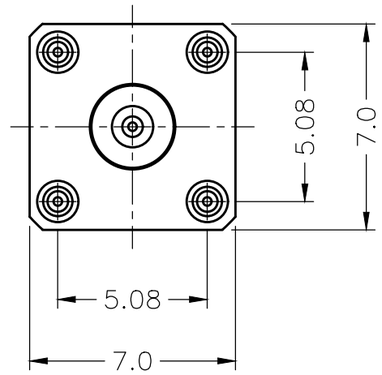

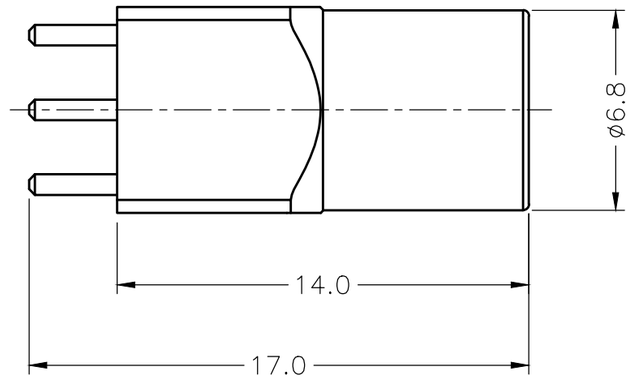

NOTE:

1. MATERIAL:

1.1.SHELL ASSEMBLY: COPPER ALLOY,OUTER SHELL Cr PLATING,
OTHER METALLIC COMPONENTS Ni PLATING

1.2.INSERT: THERMOPLASTIC,UL94V-0

1.3.CENTER CONTACT : COPPER ALLOY,Au PLATING

2.RoHS DIRECTIVE COMPLIANCE

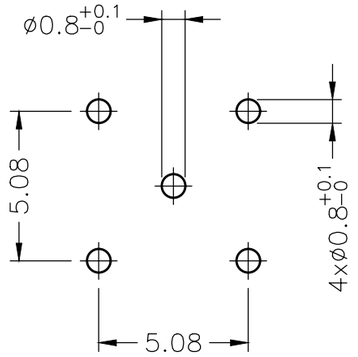

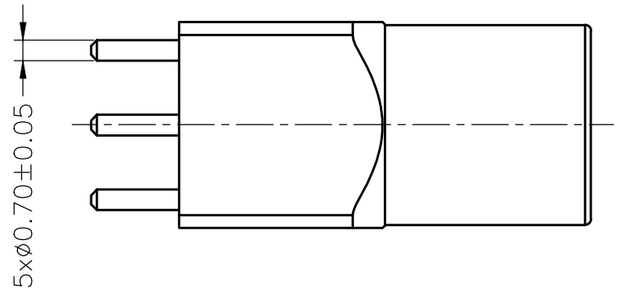

PCB DRILLING PATTEN

THIRD ANGLE PROJECTION		TOLERANCES UNLESS OTHERWISE SPECIFIED	0 PLC ± 1.00 1 PLC ± 0.50 2 PLC ± 0.25 3 PLC ± 4 PLC ±
UNITS ■ mm □ INCH			
ANGLES 0 PLC ± 3° 1 PLC ± 2°			
APPROVED BY	JACK	DATE	2023-7-31
CHECKED BY	CHARLES	DATE	2023-7-31
DRAWN BY	ANDY	DATE	2023-7-31

Dongguan Circon Technology Co.,Ltd.

TITLE: 00 METAL CIRCULAR CONNECTOR
COAXIAL TYPE-STRAIGHT SOCKET

C	DRAWING NO.	A-M-406	REV. A0
	PART NO.	00AFDXXXXX00C	
SIZE: A3	SCALE: 1:1	SHEET: 1 OF 1	

REV.	REVISION DESCRIPTION	ECR/ECN NO.	DATE