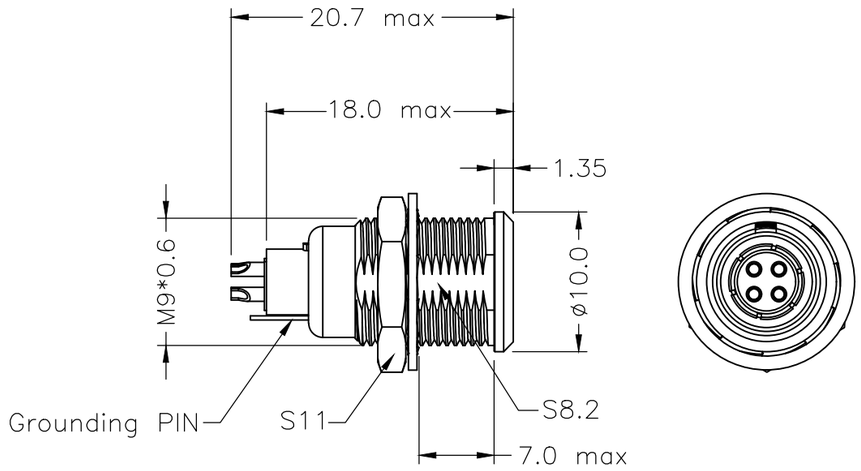

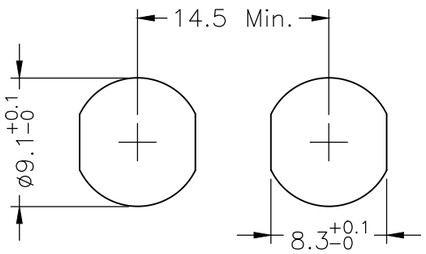

PANEL CUT-OUT

0B METAL CIRCULAR ASSEMBLY P/N DESCRIPTION :

0B A FF X X XX X 00C
① ② ③ ④

① Insert
P=PEEK
1=PPS

② Contact Plating
3=High Gold-30u"
2=High Gold-15u"
A=Gold flash

③ Number of contacts
02=2Pin
:
09=9Pin

④ Keying

G= 0°	D=135°	K= 70°
A= 30°	E=145°	L= 80°
B= 60°	F=155°	M=110°
C= 90°	J= 45°	

NOTE:

1. MATERIAL:

1.1.SHELL ASSEMBLY: COPPER ALLOY,OUTER SHELL Cr PLATING,
OTHER METALLIC COMPONENTS Ni PLATING

1.2.INSERT: THERMOPLASTIC,UL94V-0

1.3.CENTER CONTACT : COPPER ALLOY,Au PLATING

1.4.GROUNDING PIN : COPPER ALLOY,Ni PLATING

2.NUMBER OF CONTACT : 2 TO 9 POSITION

3.RoHS DIRECTIVE COMPLIANCE

REV.	REVISION DESCRIPTION	ECR/ECN NO.	DATE

THIRD ANGLE PROJECTION		TOLERANCES UNLESS OTHERWISE SPECIFIED	
UNITS ■ mm □ INCH		0 PLC ± 1.00 1 PLC ± 0.50 2 PLC ± 0.25 3 PLC ± 4 PLC ±	
ANGLES 0 PLC ± 3 1 PLC ± 2			
APPROVED BY	JACK	DATE	2025-12-17
CHECKED BY	CHARLES	DATE	2025-12-17
DRAWN BY	ANDY	DATE	2025-12-17

Dongguan Circon Technology Co.,Ltd.

TITLE: 0B METAL CIRCULAR CONNECTOR FIXED SOCKET

C	DRAWING NO.	A-M-747	REV. A0
	PART NO.	0BAFFXXXXX00C	
SIZE: A3	SCALE: 1:1	SHEET: 1 OF 2	

KEYING ANGLES (RECEPTACLE FRONT VIEW):

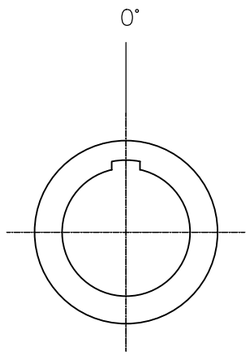

G

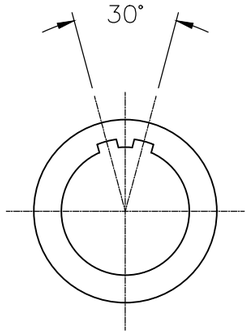

A

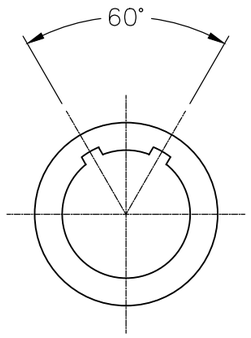

B

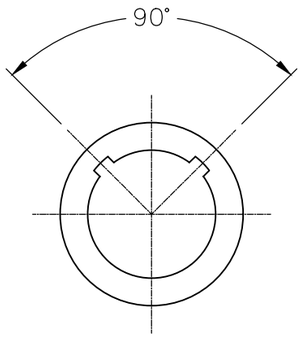

C

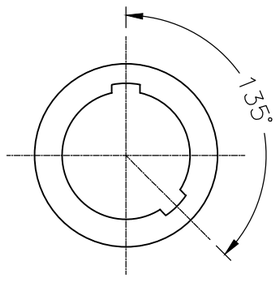

D

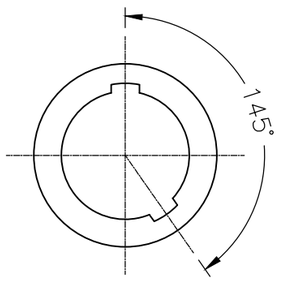

E

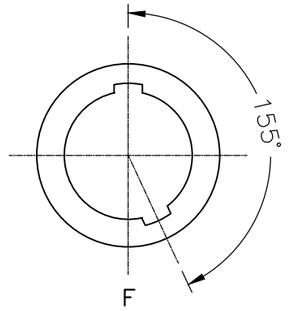

F

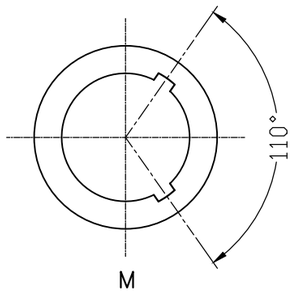

M

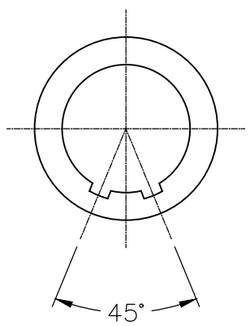

J

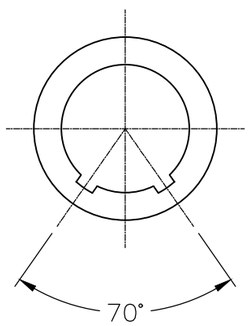

K

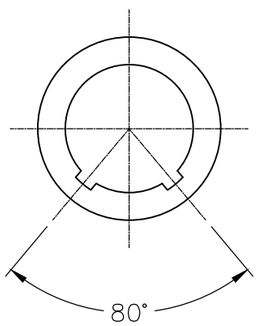

L

VIEW FROM TERMINATION SIDE PIN PART

02 PIN

03 PIN

04 PIN

05 PIN



06 PIN



07 PIN



9 PIN



THIRD ANGLE PROJECTION		TOLERANCES UNLESS OTHERWISE SPECIFIED	
UNITS ■ mm □ INCH		0 PLC ± 1.00 1 PLC ± 0.50 2 PLC ± 0.25 3 PLC ± 4 PLC ±	
ANGLES 0 PLC ± 3 1 PLC ± 2			
APPROVED BY	JACK	DATE	2025-12-17
CHECKED BY	CHARLES	DATE	2025-12-17
DRAWN BY	ANDY	DATE	2025-12-17

CIRCON®

Dongguan Circon Technology Co.,Ltd.

TITLE: 0B METAL CIRCULAR CONNECTOR FIXED SOCKET

C	DRAWING NO.	A-M-747	REV. A0
	PART NO.	0BAFFXXXXX00C	
SIZE: A3	SCALE: 1:1	SHEET: 2 OF 2	

REV.	REVISION DESCRIPTION	ECR/ECN NO.	DATE