00 METAL CIRCULAR COAXIAL TYPE P/N DESCRIPTION :

00 A FH X X XX 000C
① ② ③

① Insert
P=PEEK

② Plating
2=High Gold
A=Gold flash

③ Insert configuration
C5=Coaxial 50 Ohm

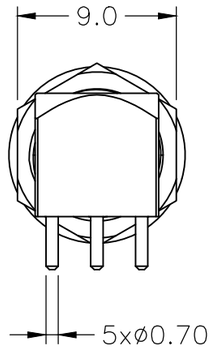

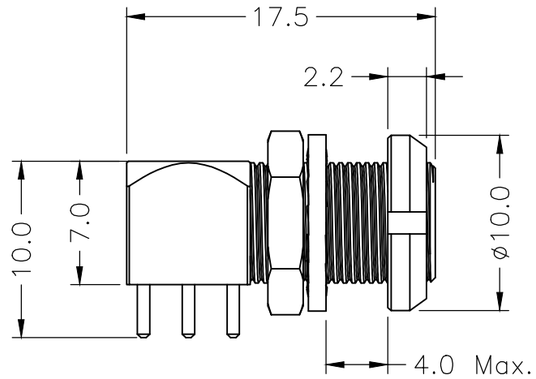

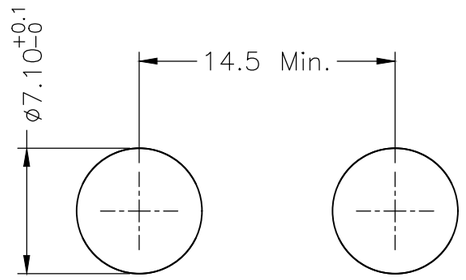

PANEL CUT-OUT

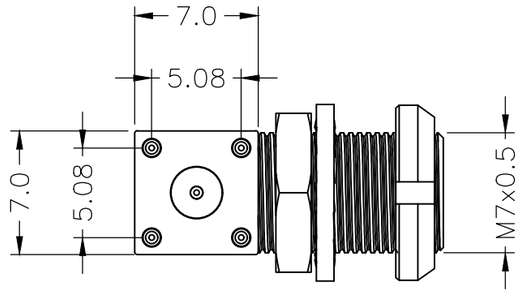

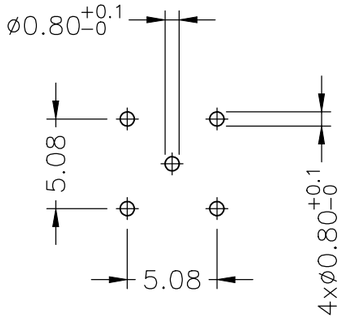

PCB DRILLING PATTEN

NOTE:

1. MATERIAL:

1.1.SHELL ASSEMBLY: COPPER ALLOY,OUTER SHELL AND NUT Cr PLATING, OTHER METALLIC COMPONENTS Ni PLATING

1.2.INSERT: THERMOPLASTIC,UL94V-0

1.3.CENTER CONTACT : COPPER ALLOY,Au PLATING

2.RoHS DIRECTIVE COMPLIANCE

THIRD ANGLE PROJECTION		TOLERANCES UNLESS OTHERWISE SPECIFIED		Dongguan Circon Technology Co.,Ltd.			
UNITS ■ mm □ INCH		0 PLC ± 1.00 1 PLC ± 0.50 2 PLC ± 0.25 3 PLC ± 4 PLC ±		TITLE: 00 METAL CIRCULAR CONNECTOR COAXIAL TYPE-ELBOW (90°) SOCKET			
ANGLES 0 PLC ± 3 1 PLC ± 2							
APPROVED BY	JACK	DATE	2026-5-22	C	DRAWING NO.	A-M-817	REV. A0
CHECKED BY	CHARLES	DATE	2026-5-22		PART NO.	00AFHXXXXX00C	
DRAWN BY	ANDY	DATE	2026-5-22	SIZE: A3	SCALE: 1:1	SHEET: 1 OF 1	

REV.	REVISION DESCRIPTION	ECR/ECN NO.	DATE