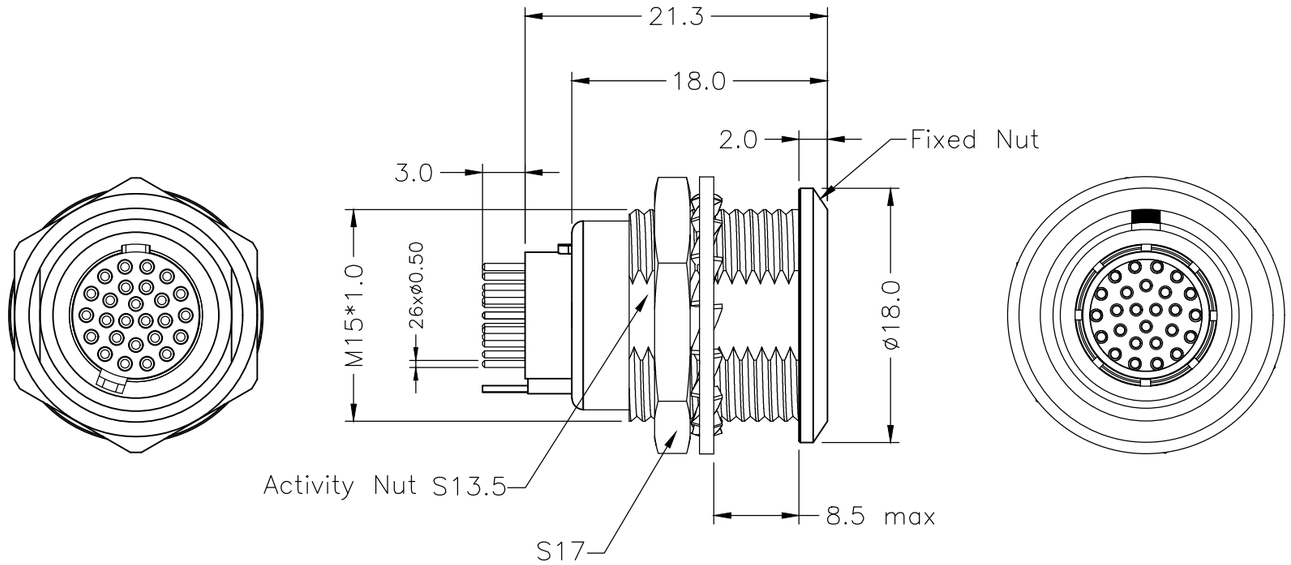

NOTE:

1. MATERIAL:

1.1.SHELL ASSEMBLY: COPPER ALLOY,OUTER SHELL Cr PLATING
OTHER METALLIC COMPONENTS Ni PLATING

1.2.INSERT: THERMOPLASTIC,UL94V–0

1.3.CENTER CONTACT : COPPER ALLOY,Au PLATING

2.NUMBER OF CONTACT : 26 POSITION

3.RoHS DIRECTIVE COMPLIANCE

4.2B METAL CIRCULAR ASSEMBLY P/N DESCRIPTION :

2B A FP X X XX X 30C
① ② ③ ④

① Insert
P=PEEK
1=PPS

② Plating
2=High Gold
A=Gold flash

③ Number of contacts
26=26Pin

④ Keying
G=0°

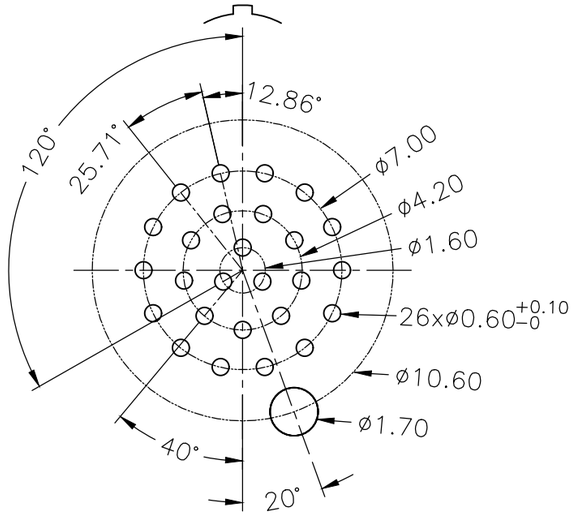

PCB DRILLING PATTEN

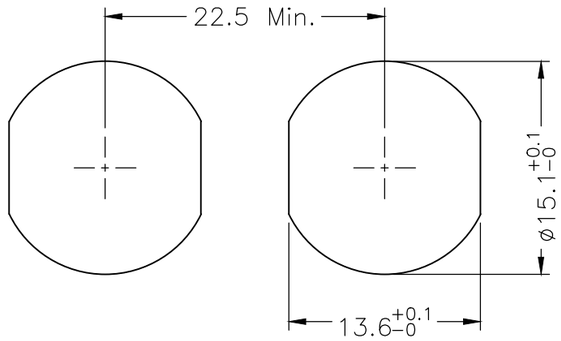

PANEL CUT–OUT

REV.	REVISION DESCRIPTION	ECR/ECN NO.	DATE	DRAWN BY	ANDY	DATE	2026–3–26

THIRD ANGLE PROJECTION		TOLERANCES UNLESS OTHERWISE SPECIFIED	0 PLC ± 1.00 1 PLC ± 0.50 2 PLC ± 0.25 3 PLC ± 4 PLC ±
UNITS ■ mm □ INCH			
ANGLES 0 PLC ± 3° 1 PLC ± 2°			
APPROVED BY	JACK	DATE	2026–3–26
CHECKED BY	CHARLES	DATE	2026–3–26

CIRCON®

Dongguan Circon Technology Co.,Ltd.

TITLE: 2B METAL CIRCULAR CONNECTOR
FIXED SOCKET–PCB CONTACTS–26PIN

C	DRAWING NO.	A–M–787	REV. A1
	PART NO.	2BAFPXXXXXX0C	
SIZE: A3	SCALE: 1:1	SHEET: 1 OF 1	