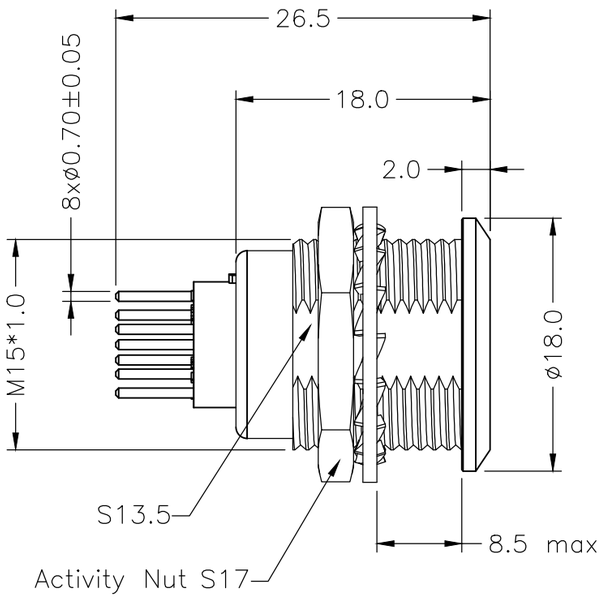

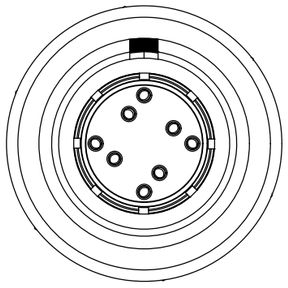

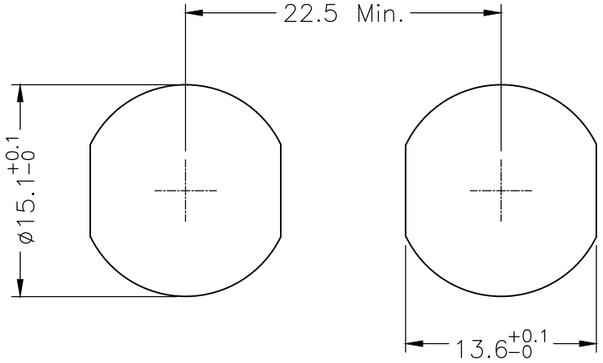

PANEL CUT–OUT

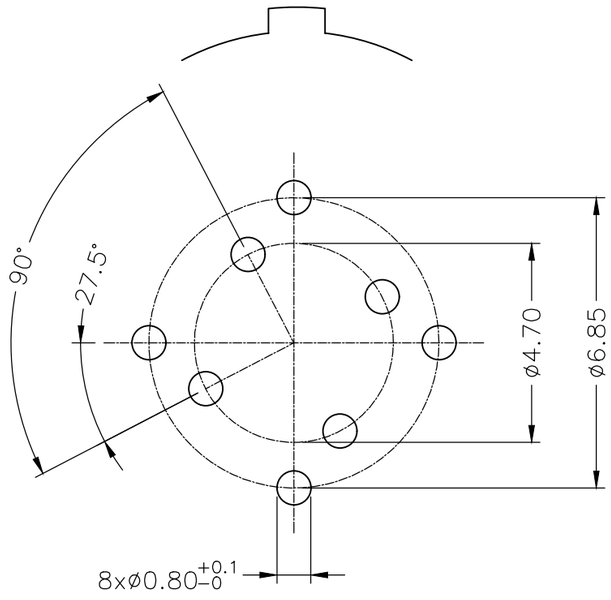

PCB DRILLING PATTEN
SCALE 3:1

2B METAL CIRCULAR ASSEMBLY P/N DESCRIPTION :

2B A FR X X XX X 00C
① ② ③ ④

① Insert
P=PEEK
1=PPS

② Plating
2=High Gold
A=Gold flash

③ Number of contacts
8A=8Pin

④ Keying

G=0°	E=120°
A=30°	F=145°
B=45°	J=37.5°
C=60°	K=52.5°
D=95°	L=70°

NOTE:

1. MATERIAL:

1.1.SHELL ASSEMBLY: COPPER ALLOY,OUTER SHELL Cr PLATING,OTHER METALLIC COMPONENTS Ni PLATING

1.2.INSERT: THERMOPLASTIC,UL94V–0

1.3.CENTER CONTACT : COPPER ALLOY,Au PLATING

2.NUMBER OF CONTACT : 8 POSITION

3.RoHS DIRECTIVE COMPLIANCE

REV.	REVISION DESCRIPTION	ECR/ECN NO.	DATE

THIRD ANGLE PROJECTION

UNITS ■ mm □ INCH

ANGLES 0 PLC ± 3°
1 PLC ± 2°

TOLERANCES UNLESS OTHERWISE SPECIFIED
0 PLC ± 1.00
1 PLC ± 0.50
2 PLC ± 0.25
3 PLC ±
4 PLC ±

APPROVED BY	JACK	DATE	2025–12–12
CHECKED BY	CHARLES	DATE	2025–12–12
DRAWN BY	ANDY	DATE	2025–12–12

Dongguan Circon Technology Co.,Ltd.

TITLE: 2B METAL CIRCULAR CONNECTOR FIXED SOCKET–HIGH SPEED

C	DRAWING NO.	A–M–744	REV. A0
	PART NO.	2BAFRXXXXX00C	

SIZE: A3 | SCALE: 1:1 | SHEET: 1 OF 2

KEYING ANGLES (RECEPTACLE FRONT VIEW):

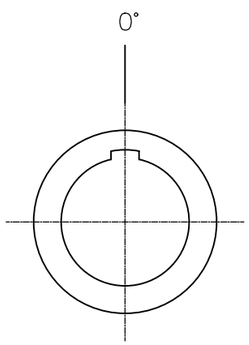

G

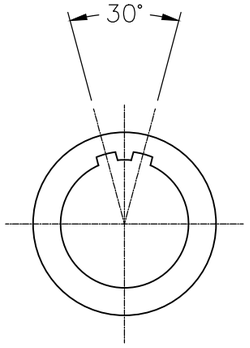

A

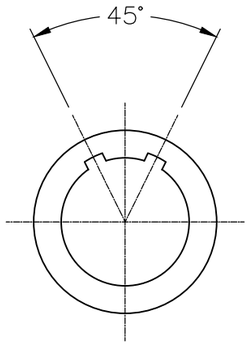

B

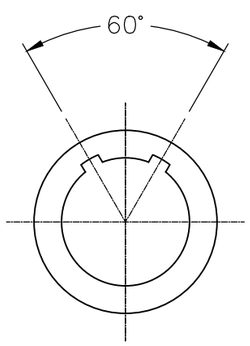

C

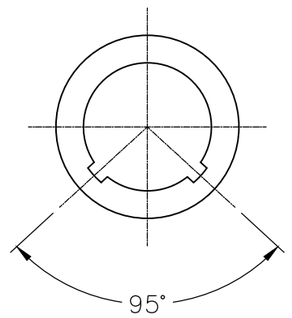

D

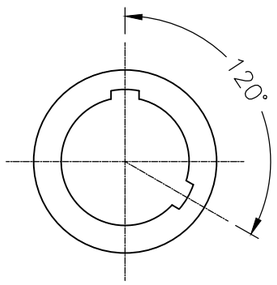

E

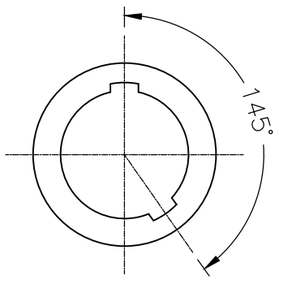

F

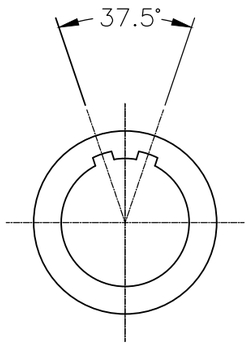

J

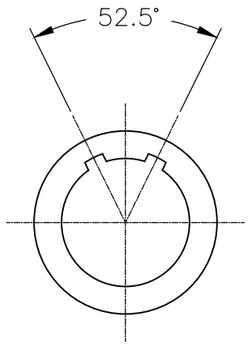

K

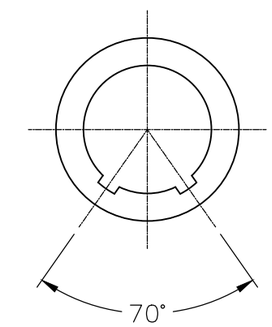

L

THIRD ANGLE PROJECTION		TOLERANCES UNLESS OTHERWISE SPECIFIED		Dongguan Circon Technology Co.,Ltd.			
UNITS ■ mm □ INCH		0 PLC ± 1.00 1 PLC ± 0.50 2 PLC ± 0.25 3 PLC ± 4 PLC ±		TITLE: 2B METAL CIRCULAR CONNECTOR FIXED SOCKET–HIGH SPEED			
ANGLES 0 PLC ± 3° 1 PLC ± 2°				C	DRAWING NO.	A–M–744	REV. A0
APPROVED BY	JACK	DATE	2025–12–12		PART NO.	2BAFRXXXXX00C	
CHECKED BY	CHARLES	DATE	2025–12–12				
DRAWN BY	ANDY	DATE	2025–12–12	SIZE: A3	SCALE: 1:1	SHEET: 2 OF 2	

REV.	REVISION DESCRIPTION	ECR/ECN NO.	DATE