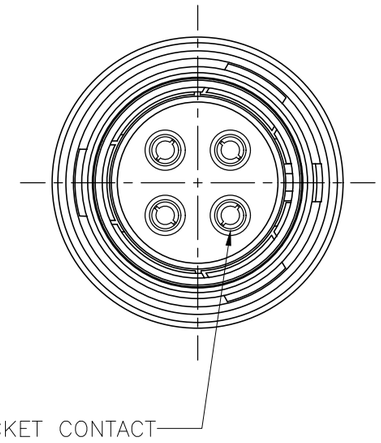

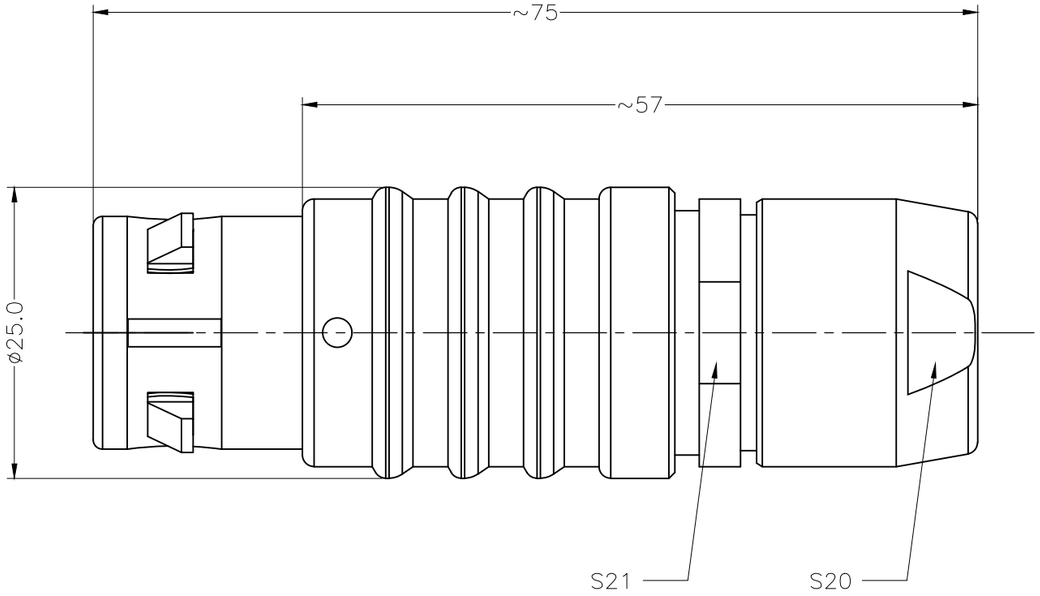

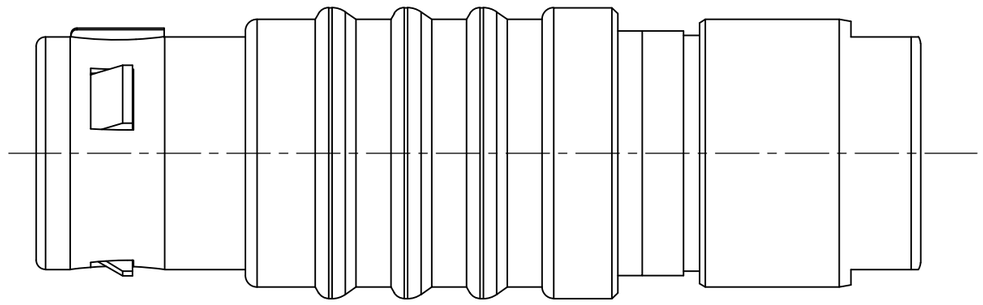

4B METAL CIRCULAR ASSEMBLY P/N DESCRIPTION :

4B A M2 X X XX X XX A
① ② ③ ④ ⑤

① Insert
P=PEEK
1=PPS

② Plating
2=High Gold
A=Gold flash

③ Number of contacts
04=4Pin
⋮
48=48Pin

④ Keying

G= 0°	E= 120°
A= 30°	F= 145°
B= 45°	J= 37.5°
C= 60°	K= 52.5°
D= 95°	L= 70°

⑤ Cable collet
62=6.2mm (Cableø5.2~6.2mm)
72=7.2mm (Cableø6.2~7.2mm)
82=8.2mm (Cableø7.2~8.2mm)
92=9.2mm (Cableø8.2~9.2mm)
10=10.8mm (Cableø9.1~10.5mm)
12=12.3mm (Cableø10.6~12.0mm)
13=13.8mm (Cableø12.1~13.5mm)
15=15.3mm (Cableø13.6~15.0mm)
16=16.3mm (Cableø15.1~16.0mm)

NOTE:
1. MATERIAL:
1.1.SHELL ASSEMBLY: COPPER ALLOY,OUTER SHELL COLLET NUT Cr PLATING, OTHER METALLIC COMPONENTS Ni PLATING
1.2.INSERT: THERMOPLASTIC,UL94V-0
1.3.CENTER CONTACT : COPPER ALLOY,Au PLATING
2.NUMBER OF CONTACT : 4 TO 48 POSITION
3.RoHS DIRECTIVE COMPLIANCE

THIRD ANGLE PROJECTION		TOLERANCES UNLESS OTHERWISE SPECIFIED		Dongguan Circon Technology Co.,Ltd.			
UNITS ■ mm □ INCH		0 PLC ± 1.00 1 PLC ± 0.50 2 PLC ± 0.25 3 PLC ± 4 PLC ±		TITLE: 4B METAL CIRCULAR CONNECTOR STRAIGHT PLUGS			
ANGLES 0 PLC ± 3° 1 PLC ± 2°				C	DRAWING NO.	A-M-322	REV. A0
					PART NO.	4BAM2XXXXXXXA	
APPROVED BY	JACK	DATE	2022-10-31				
CHECKED BY	CHARLES	DATE	2022-10-31				
DRAWN BY	ANDY	DATE	2022-10-31	SIZE: A3	SCALE: 1:1	SHEET: 1 OF 3	

REV.	REVISION DESCRIPTION	ECR/ECN NO.	DATE

KEYING (PLUG FRONT VIEW):

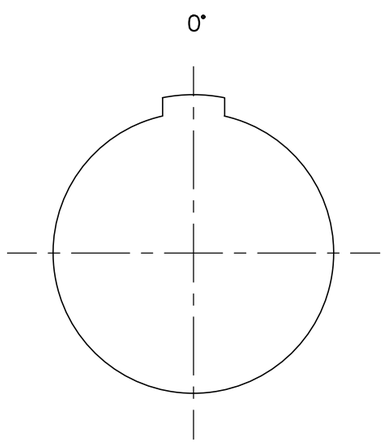

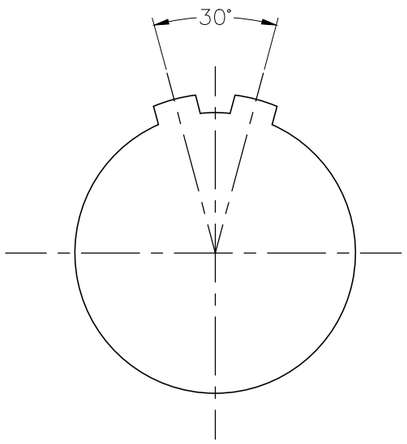

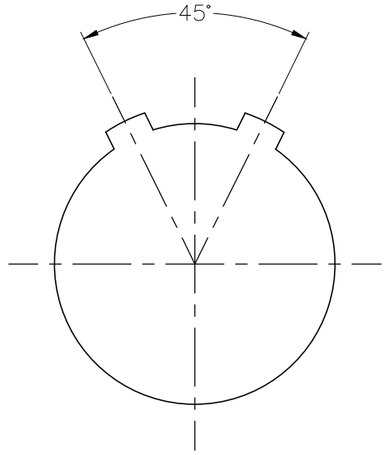

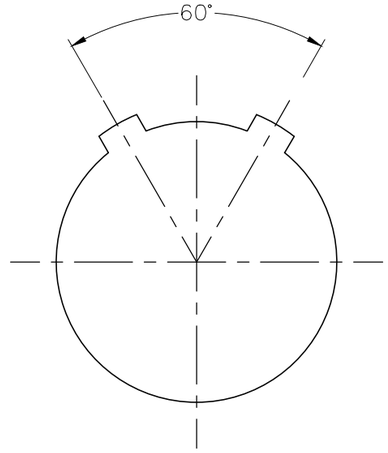

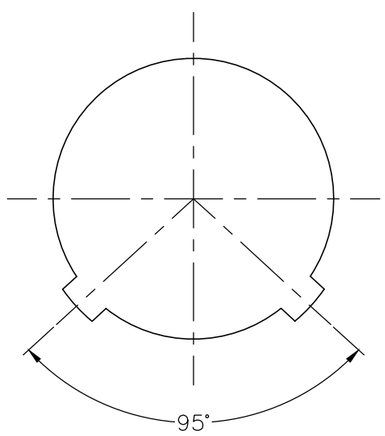

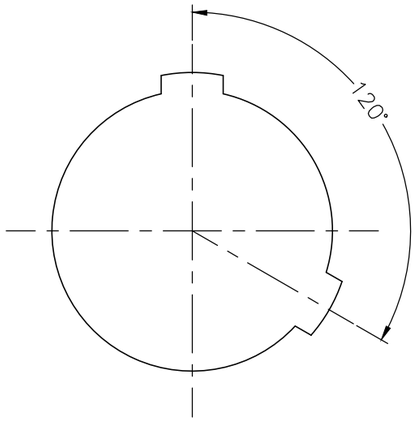

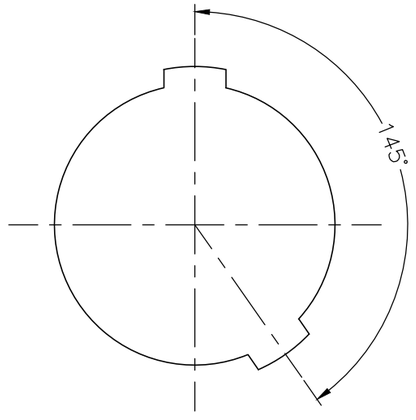

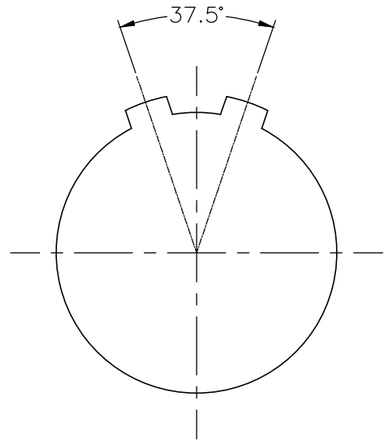

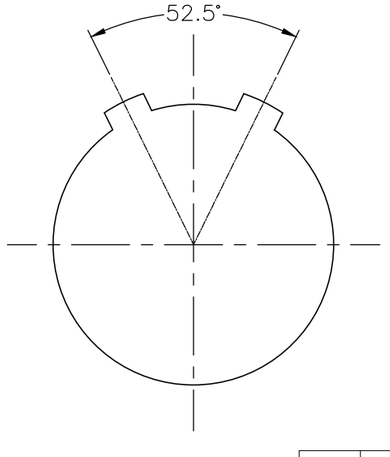

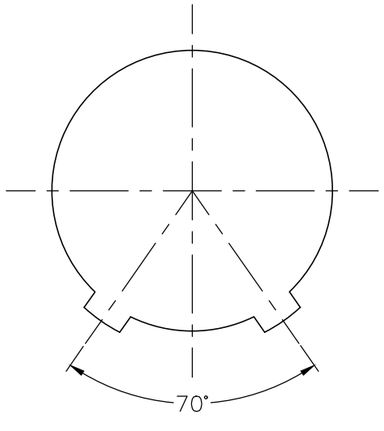

THIRD ANGLE PROJECTION		TOLERANCES UNLESS OTHERWISE SPECIFIED	
UNITS ■ mm □ INCH		0 PLC ± 1.00 1 PLC ± 0.50 2 PLC ± 0.25 3 PLC ± 4 PLC ±	
ANGLES 0 PLC ± 3° 1 PLC ± 2°			
APPROVED BY	JACK	DATE	2022-10-31
CHECKED BY	CHARLES	DATE	2022-10-31
DRAWN BY	ANDY	DATE	2022-10-31

Dongguan Circon Technology Co.,Ltd.

TITLE: 4B METAL CIRCULAR CONNECTOR STRAIGHT PLUGS

C	DRAWING NO.	A-M-322	REV. A0
	PART NO.	4BAM2XXXXXXXA	
SIZE: A3	SCALE: 1:1	SHEET: 2 OF 3	

REV.	REVISION DESCRIPTION	ECR/ECN NO.	DATE

VIEW FROM TERMINATION SIDE PIN PART

4 POS.

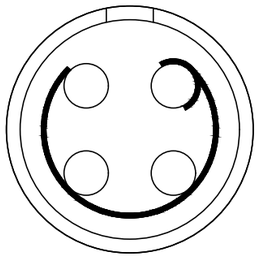

6 POS.

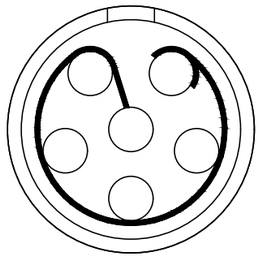

7 POS.

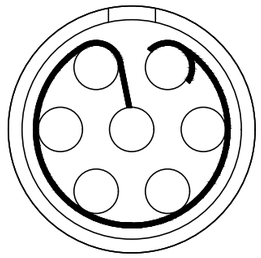

10 POS.

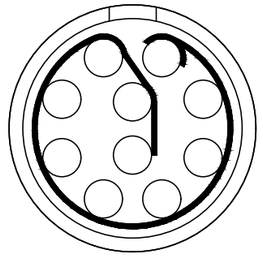

12 POS.

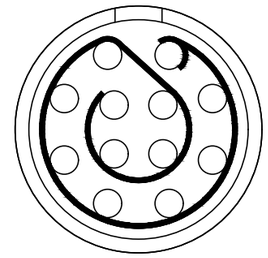

16 POS.

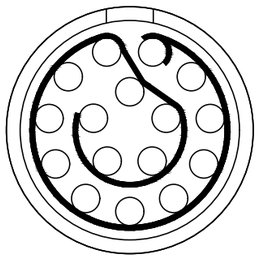

20 POS.

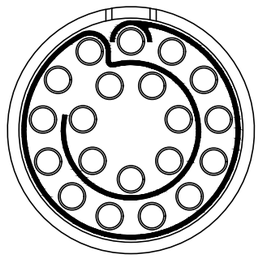

24 POS.

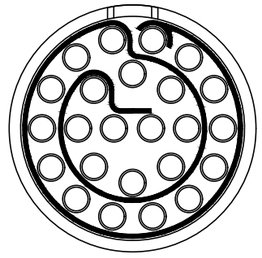

30 POS.

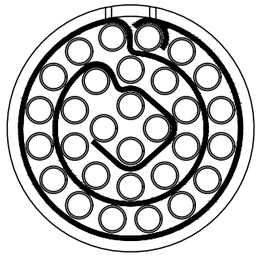

40 POS.

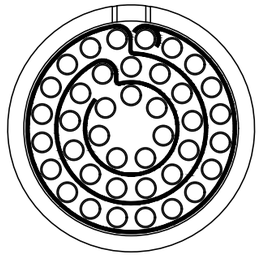

48 POS.

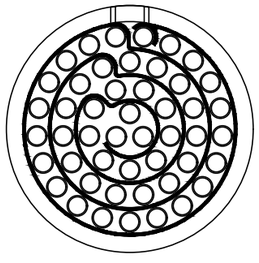

THIRD ANGLE PROJECTION		TOLERANCES UNLESS OTHERWISE SPECIFIED	0 PLC ± 1.00 1 PLC ± 0.50 2 PLC ± 0.25 3 PLC ± 4 PLC ±
UNITS ■ mm □ INCH			
ANGLES 0 PLC ± 3° 1 PLC ± 2°			
APPROVED BY	JACK	DATE	2022-10-31
CHECKED BY	CHARLES	DATE	2022-10-31
DRAWN BY	ANDY	DATE	2022-10-31

Dongguan Circon Technology Co.,Ltd.

TITLE: 4B METAL CIRCULAR CONNECTOR STRAIGHT PLUGS

C	DRAWING NO.	A-M-322	REV. A0
	PART NO.	4BAM2XXXXXXXA	

SIZE: A3 | SCALE: 1:1 | SHEET: 3 OF 3

REV.	REVISION DESCRIPTION	ECR/ECN NO.	DATE