00 METAL CIRCULAR COAXIAL TYPE P/N DESCRIPTION :

00 A M3 X X XX 0 XX A
① ② ③ ④

① Insert
P=PEEK

② Plating
2=High Gold
A=Gold flash

③ Insert configuration
C5=Coaxial 50 Ohm

④ Cable collet
15=1.5mm (Sheathø1.1~1.4mm)
17=1.7mm (Sheathø1.3~1.7mm)
22=2.2mm (Sheathø1.8~2.2mm)
27=2.7mm (Sheathø2.3~2.7mm)
31=3.1mm (Sheathø2.8~3.0mm)

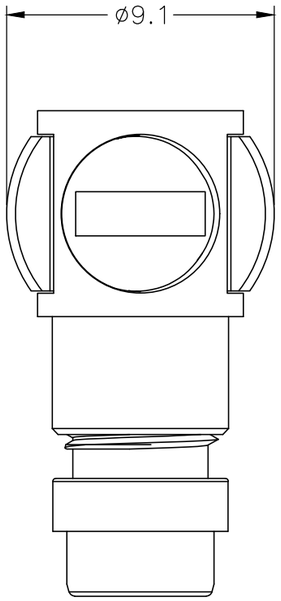

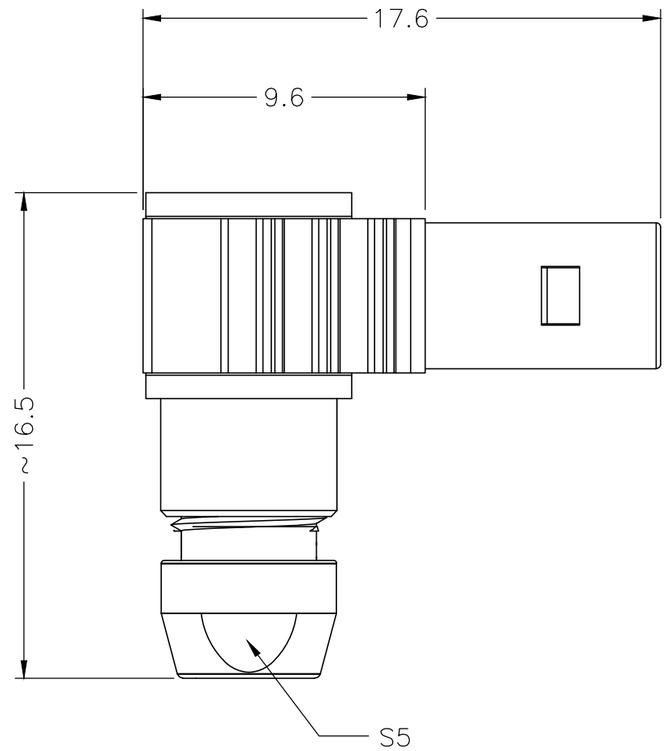

NOTE:

1. MATERIAL:

1.1.SHELL ASSEMBLY: COPPER ALLOY,OUTER SHELL AND COLLET NUT Cr PLATING,
OTHER METALLIC COMPONENTS Ni PLATING

1.2.INSERT: THERMOPLASTIC,UL94V-0

1.3.CENTER CONTACT : COPPER ALLOY,Au PLATING

2.RoHS DIRECTIVE COMPLIANCE

REV.	REVISION DESCRIPTION	ECR/ECN NO.	DATE

THIRD ANGLE PROJECTION

UNITS ■ mm □ INCH

ANGLES 0 PLC ± 3°
1 PLC ± 2°

TOLERANCES UNLESS OTHERWISE SPECIFIED
0 PLC ± 1.00
1 PLC ± 0.50
2 PLC ± 0.25
3 PLC ±
4 PLC ±

APPROVED BY	JACK	DATE	2023-7-31
CHECKED BY	CHARLES	DATE	2023-7-31
DRAWN BY	ANDY	DATE	2023-7-31

Dongguan Circon Technology Co.,Ltd.

TITLE: 00 METAL CIRCULAR CONNECTOR
COAXIAL TYPE-ELBOW PLUG

C	DRAWING NO.	A-M-407	REV. A0
	PART NO.	00AM3XXXXXXXA	

SIZE: A3 | SCALE: 1:1 | SHEET: 1 OF 1