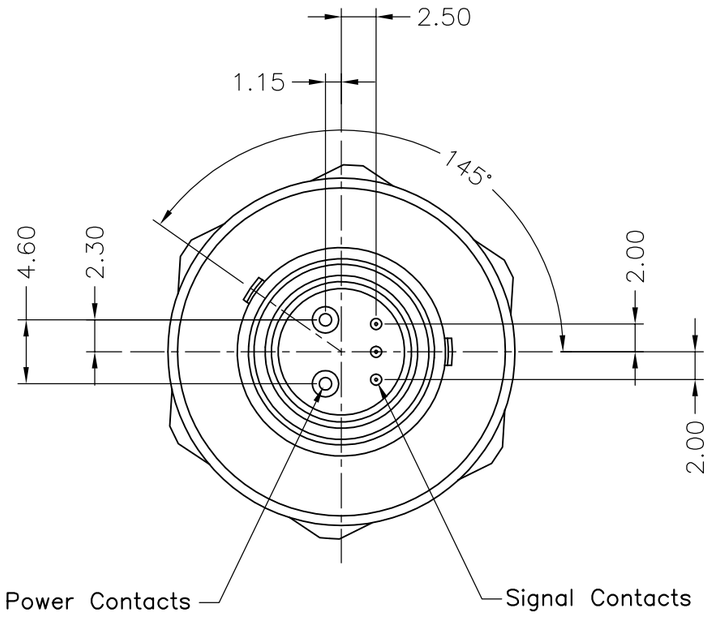

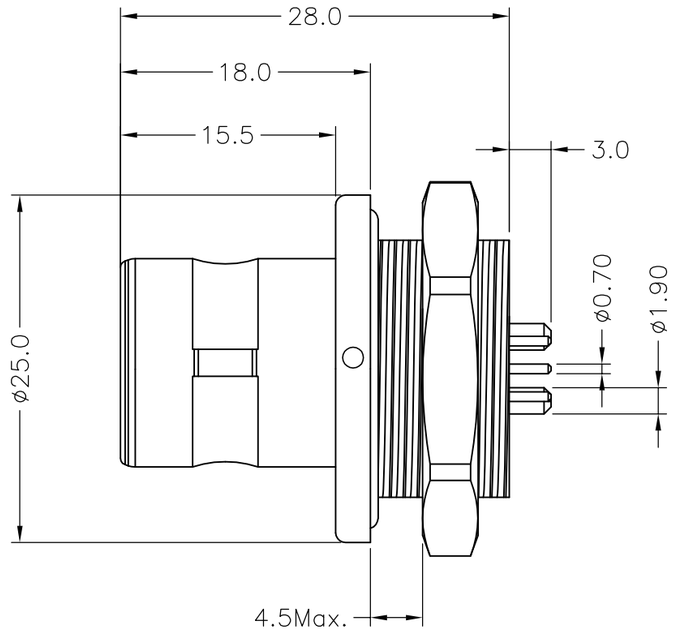

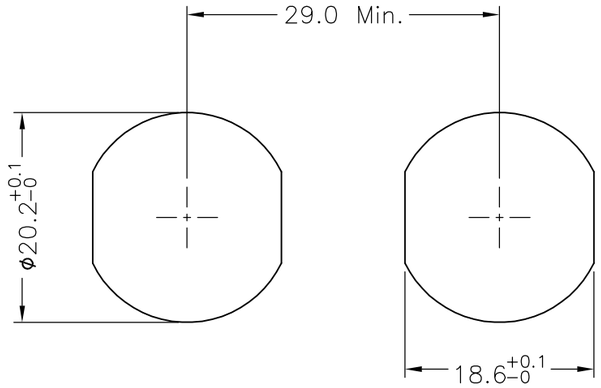

PANEL CUT–OUT

NOTE:

1. MATERIAL:

1.1.SHELL ASSEMBLY:

OUTER SHELL: ALUMINIUM ALLOY, Cr PLATING

OTHER METALLIC COMPONENTS: COPPER ALLOY, Ni PLATING

1.2.INSERT: THERMOPLASTIC,UL94V–0

1.3.CENTER CONTACT : COPPER ALLOY,Au PLATING

1.4.O–ring : ELASTOMER

1.5.NUT: COPPER ALLOY, Ni PLATING

2.ELECTRICAL

2.1.RATED CURRENT FOR POWER CONTACT: 15A

RATED CURRENT FOR SIGNAL CONTACT: 2A

2.2.INSULATION RESISTANCE: 2000MΩ MIN

2.3.DIELECTRIC STRENGTH: 3.2~3.5(AT10^6Hz)

3.ENVIRONMENTAL

3.1.TEMPERATURE RANGE:–55°C~+125°C

4.NUMBER OF CONTACT : 5 POSITION

5.RoHS DIRECTIVE COMPLIANCE

6.WEIGHT OF THE CONNECTOR: N/A

7.ENGAGEMENT&DIS–ENGAGEMENT LENGTH: 3.9mm

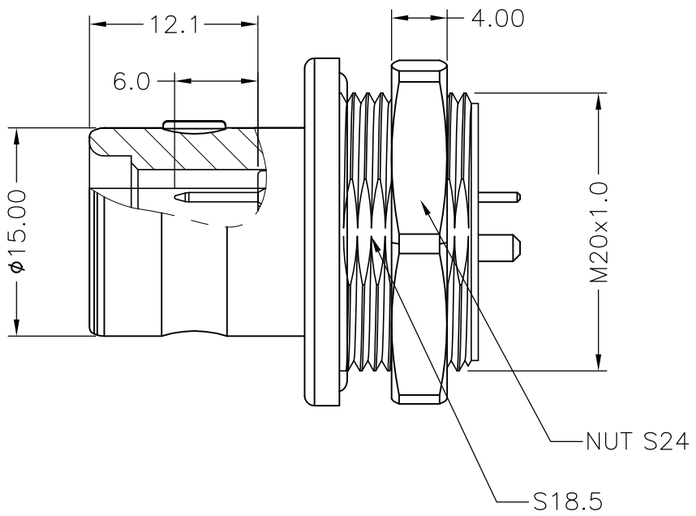

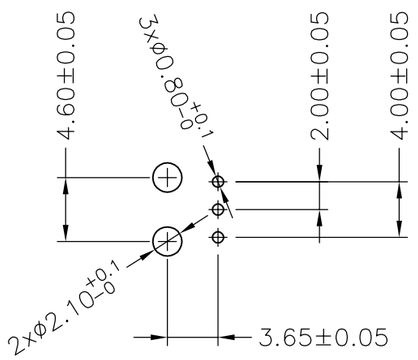

PCB LAYOUT

REV.	REVISION DESCRIPTION	ECR/ECN NO.	DATE
A2	Keying change	EC22006	2022–6–10

THIRD ANGLE PROJECTION

UNITS ■ mm □ INCH

ANGLES 0 PLC ± 3
1 PLC ± 2

TOLERANCES UNLESS OTHERWISE SPECIFIED
0 PLC ± 1.00
1 PLC ± 0.50
2 PLC ± 0.25
3 PLC ±
4 PLC ±

APPROVED BY	JACK	DATE	2022–6–13
CHECKED BY	CHARLES	DATE	2022–6–13
DRAWN BY	ANDY	DATE	2022–6–13

Dongguan Circon Technology Co.,Ltd.

TITLE: 2K METAL CIRCULAR CONNECTOR STRAIGHT PLUGS

C	DRAWING NO. A–M–226	REV. A2
	PART NO. 2KAF71AA50000	

SIZE: A3 | SCALE: 1:1 | SHEET: 1 OF 1