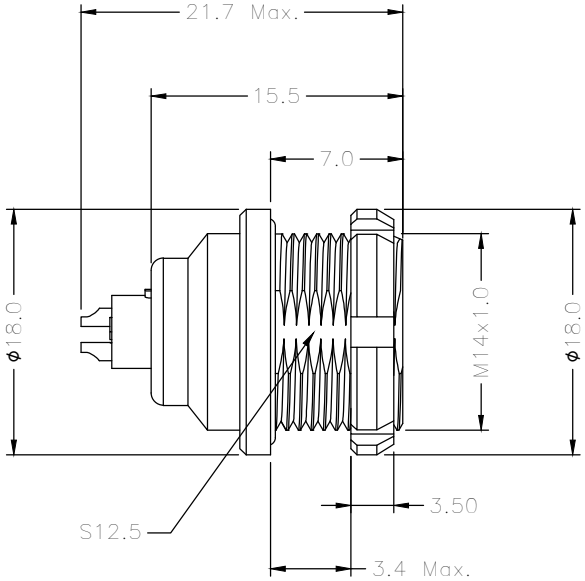

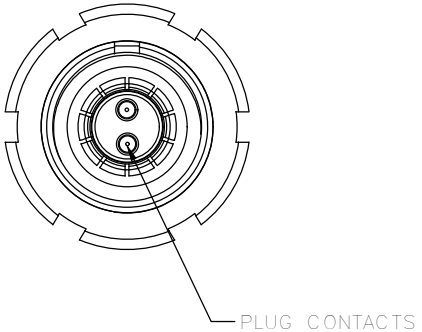

0K METAL CIRCULAR ASSEMBLY P/N DESCRIPTION :

0K A FA X X XX X 00 C
① ② ③ ④

① Insert
P=PEEK
1=PPS

② Plating
2=High Gold
A=Gold flash

③ Number of contacts
02=2Pin
:
09=9Pin

④ Keying

G=0°	D=95°
A=30°	E=120°
B=45°	F=145°
C=60°	L=75°

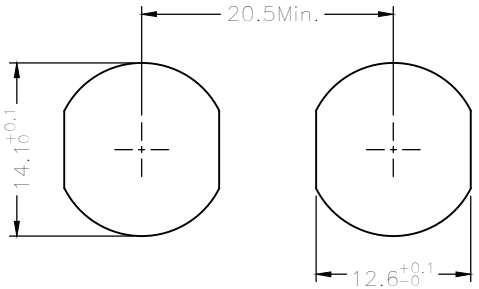

PANEL CUT-OUT

NOTE:

1. MATERIAL:

1.1.SHELL ASSEMBLY: COPPER ALLOY,OUTER SHELL Cr PLATING,
OTHER METALLIC COMPONENTS Ni PLATING

1.2.INSERT: THERMOPLASTIC,UL94V-0

1.3.CENTER CONTACT : COPPER ALLOY,Au PLATING

1.4.O-RING : ELASTOMER

2.NUMBER OF CONTACT : 2 TO 9 POSITION

3.RoHS DIRECTIVE COMPLIANCE

REV.	REVISION DESCRIPTION	ECR/ECN NO.	DATE

THIRD ANGLE PROJECTION		TOLERANCES UNLESS OTHERWISE SPECIFIED	
UNITS ■ mm □ INCH		0 PLC ± 1.00 1 PLC ± 0.50 2 PLC ± 0.25 3 PLC ± 4 PLC ±	
ANGLES 0 PLC ± 3 1 PLC ± 2			
APPROVED BY	JACK	DATE	2021-6-29
CHECKED BY	CHARLES	DATE	2021-6-29
DRAWN BY	ANDY	DATE	2021-6-29

Dongguan Circon Technology Co.,Ltd.

TITLE: 0K METAL CIRCULAR CONNECTOR
FIXED SOCKETS-PLUG CONTACTS

C	DRAWING NO.	A-M-239	REV. A0
	PART NO.	0KAFAXXXX00C	

SIZE: A3 | SCALE: 1:1 | SHEET: 1 OF 2

VIEW FROM TERMINATION SIDE PIN PART

2 POS. 3 POS. 4 POS. 5 POS. 6 POS. 7 POS. 9 POS.



KEYING ANGLES (RECEPTACLE FRONT VIEW):

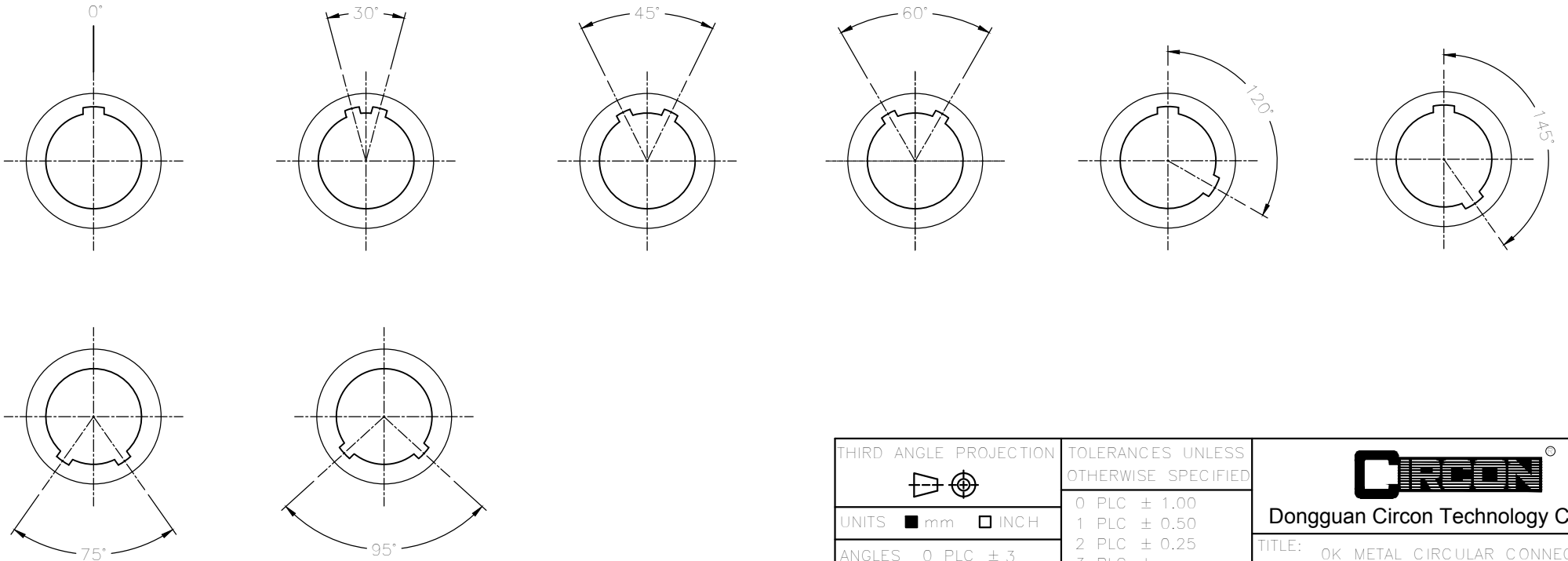

THIRD ANGLE PROJECTION		TOLERANCES UNLESS OTHERWISE SPECIFIED	
UNITS ■ mm □ INCH		0 PLC ± 1.00 1 PLC ± 0.50 2 PLC ± 0.25 3 PLC ± 4 PLC ±	
ANGLES 0 PLC ± 3 1 PLC ± 2			
APPROVED BY	JACK	DATE	2021-6-29
CHECKED BY	CHARLES	DATE	2021-6-29
DRAWN BY	ANDY	DATE	2021-6-29

Dongguan Circon Technology Co.,Ltd.

TITLE: 0K METAL CIRCULAR CONNECTOR
FIXED SOCKETS-PLUG CONTACTS

C	DRAWING NO.	A-M-239	REV. A0
	PART NO.	0KAFAXXXX00C	

REV.	REVISION DESCRIPTION	ECR/ECN NO.	DATE

SIZE: A3 SCALE: 1:1 SHEET: 2 OF 2