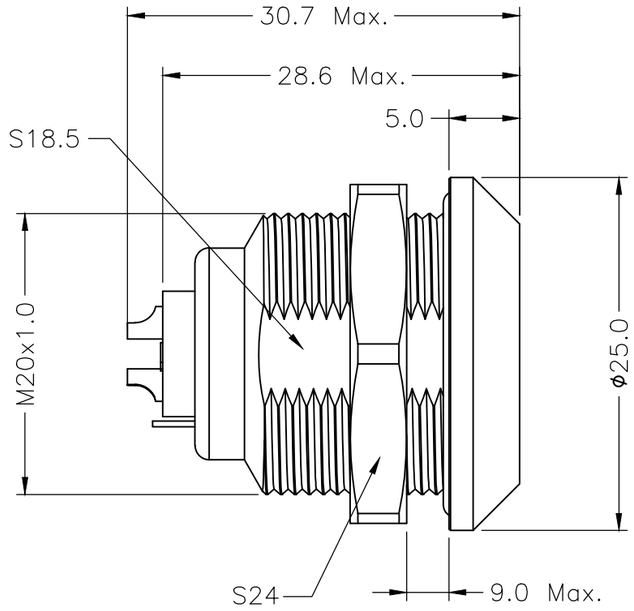

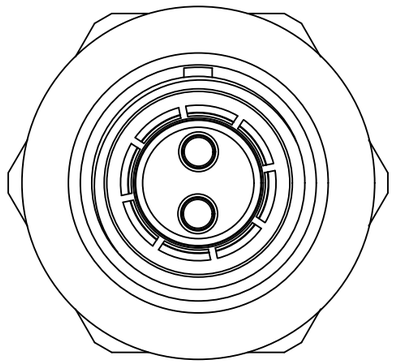

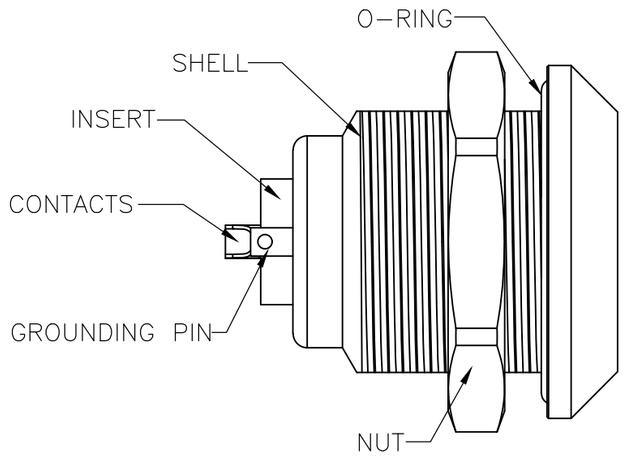

2K METAL CIRCULAR ASSEMBLY P/N DESCRIPTION :

2K A FF X X XX X 00 C
① ② ③ ④

① Insert
P=PEEK
1=PPS

② Plating
2=High Gold
A=Gold flash

③ Number of contacts
02=2Pin
⋮
32=32Pin

④ Keying

G= 0°	D= 95°
A= 30°	E=120°
B= 45°	F=145°
C= 60°	L= 75°

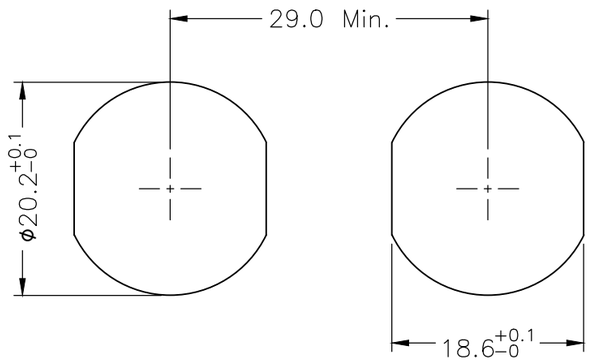

PANEL CUT-OUT

NOTE:

1. MATERIAL:

1.1.SHELL ASSEMBLY: COPPER ALLOY,OUTER SHELL Cr PLATING, OTHER METALLIC COMPONENTS Ni PLATING

1.2.INSERT: THERMOPLASTIC,UL94V-0

1.3.CENTER CONTACT : COPPER ALLOY,Au PLATING

1.4.O-RING : ELASTOMER

2.NUMBER OF CONTACT : 2 TO 32 POSITION

3.RoHS DIRECTIVE COMPLIANCE

THIRD ANGLE PROJECTION		TOLERANCES UNLESS OTHERWISE SPECIFIED		CIRCON® Dongguan Circon Technology Co.,Ltd.			
UNITS ■ mm □ INCH		0 PLC ± 1.00 1 PLC ± 0.50 2 PLC ± 0.25 3 PLC ± 4 PLC ±		TITLE: 2K METAL CIRCULAR CONNECTOR FIXED SOCKETS-WITH GROUNDING PIN			
ANGLES 0 PLC ± 3 1 PLC ± 2							
APPROVED BY	JACK	DATE	2024-8-8	C	DRAWING NO.	A-M-549	REV. A0
CHECKED BY	CHARLES	DATE	2024-8-8		PART NO.	2KAFFP2XXX00C	
DRAWN BY	ANDY	DATE	2024-8-8	SIZE: A3	SCALE: 1:1	SHEET: 1 OF 3	

REV.	REVISION DESCRIPTION	ECR/ECN NO.	DATE

KEYING ANGLES (RECEPTACLE FRONT VIEW):

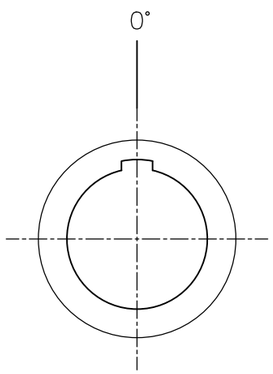

G

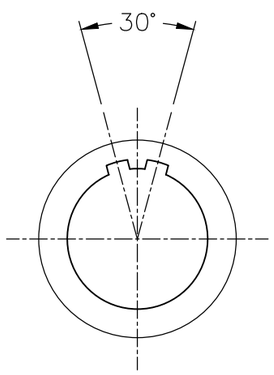

A

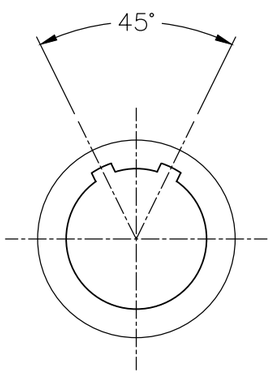

B

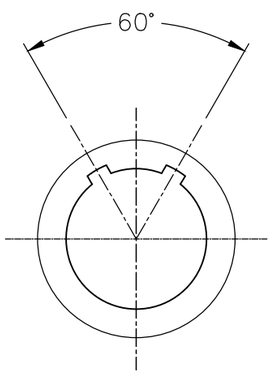

C

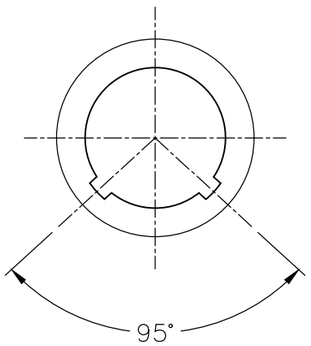

D

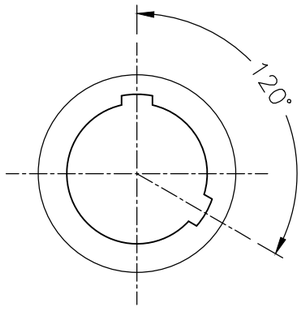

E

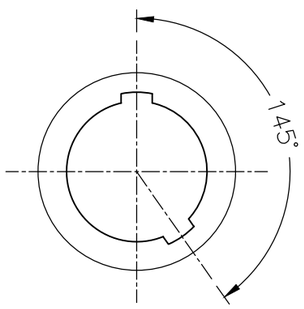

F

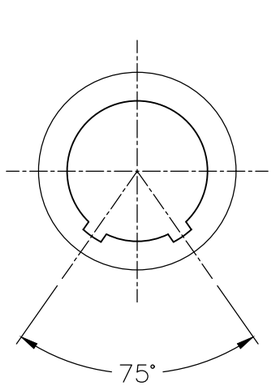

L

THIRD ANGLE PROJECTION		TOLERANCES UNLESS OTHERWISE SPECIFIED	0 PLC ± 1.00 1 PLC ± 0.50 2 PLC ± 0.25 3 PLC ± 4 PLC ±
UNITS ■ mm □ INCH			
ANGLES 0 PLC ± 3 1 PLC ± 2			
APPROVED BY	JACK	DATE	2024-8-8
CHECKED BY	CHARLES	DATE	2024-8-8
DRAWN BY	ANDY	DATE	2024-8-8

Dongguan Circon Technology Co.,Ltd.

TITLE: 2K METAL CIRCULAR CONNECTOR
FIXED SOCKETS–WITH GROUNDING PIN

C	DRAWING NO.	A–M–549	REV. A0
	PART NO.	2KAFFP2XXX00C	

SIZE: A3 | SCALE: 1:1 | SHEET: 2 OF 3

REV.	REVISION DESCRIPTION	ECR/ECN NO.	DATE

VIEW FROM TERMINATION SIDE PIN PART

2 POS.

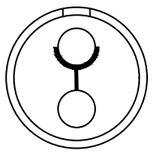

3 POS.



4 POS.

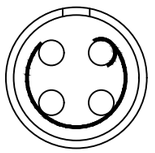

5 POS.

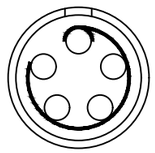

6 POS.

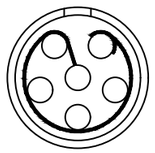

7 POS.

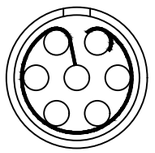

8 POS.

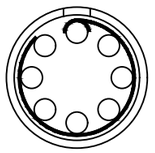

10 POS.

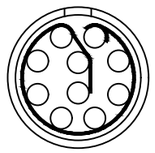

12 POS.



14 POS.



16 POS.



18 POS.

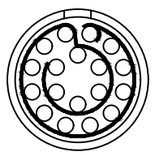

19 POS.

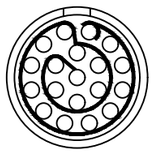

26 POS.

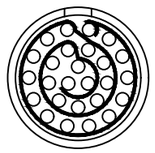

32 POS.

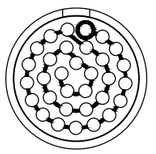

REV.	REVISION DESCRIPTION	ECR/ECN NO.	DATE	DRAWN BY	ANDY	DATE	2024-8-8

THIRD ANGLE PROJECTION		TOLERANCES UNLESS OTHERWISE SPECIFIED	0 PLC ± 1.00 1 PLC ± 0.50 2 PLC ± 0.25 3 PLC ± 4 PLC ±
UNITS ■ mm □ INCH			
ANGLES 0 PLC ± 3 1 PLC ± 2			
APPROVED BY	JACK	DATE	2024-8-8
CHECKED BY	CHARLES	DATE	2024-8-8

CIRCON®

Dongguan Circon Technology Co.,Ltd.

TITLE: 2K METAL CIRCULAR CONNECTOR
FIXED SOCKETS-WITH GROUNDING PIN

C	DRAWING NO.	A-M-549	REV. A0
	PART NO.	2KAFFP2XXX00C	
SIZE: A3	SCALE: 1:1	SHEET: 3 OF 3	