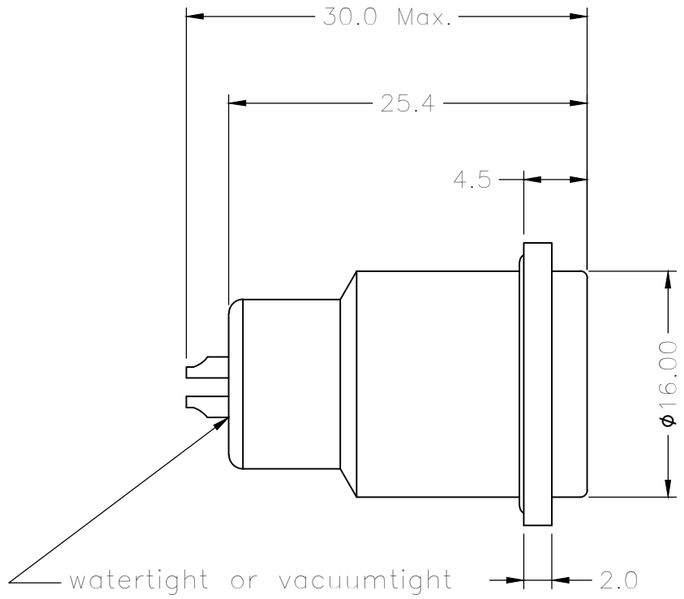

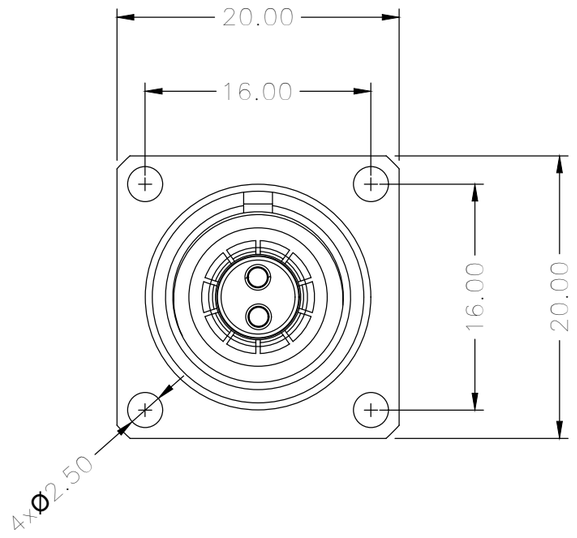

1K METAL CIRCULAR ASSEMBLY P/N DESCRIPTION :

1K A FG X X XX X 00 0
① ② ③ ④

① Insert
P=PEEK
1=PPS

② Plating
2=High Gold
A=Gold flash

③ Number of contacts
02=2Pin
⋮
16=16Pin

④ Keying

G= 0°	D= 95°
A= 30°	E=120°
B= 45°	F=145°
C= 60°	L= 75°

NOTE:

1. MATERIAL:

1.1.SHELL ASSEMBLY: COPPER ALLOY,OUTER SHELL Cr PLATING,
OTHER METALLIC COMPONENTS Ni PLATING

1.2.INSERT: THERMOPLASTIC,UL94V-0

1.3.CENTER CONTACT : COPPER ALLOY,Au PLATING

1.4.O-RING : ELASTOMER

2.NUMBER OF CONTACT : 2 TO 16 POSITION

3.RoHS DIRECTIVE COMPLIANCE

4.PROTECTION CLASS:IP68 UNDER THE CONDITION OF MALE AND FEMALE MATCHING

THIRD ANGLE PROJECTION		TOLERANCES UNLESS OTHERWISE SPECIFIED	
UNITS ■ mm □ INCH		0 PLC ± 1.00 1 PLC ± 0.50 2 PLC ± 0.25 3 PLC ± 4 PLC ±	
ANGLES 0 PLC ± 3 1 PLC ± 2			
APPROVED BY	JACK	DATE	2022-1-25
CHECKED BY	CHARLES	DATE	2022-1-25
DRAWN BY	ANDY	DATE	2022-1-25

Dongguan Circon Technology Co.,Ltd.

TITLE: 1K METAL CIRCULAR CONNECTOR
FIXED SOCKETS-FLANGED/WATERTIGHT

C	DRAWING NO.	A-M-401	REV. A0
	PART NO.	1KAFGXXXXX000	

REV.	REVISION DESCRIPTION	ECR/ECN NO.	DATE

SIZE: A3 | SCALE: 1:1 | SHEET: 1 OF 2

VIEW FROM TERMINATION SIDE PIN PART

2 POS. 3 POS. 4 POS. 5 POS. 6 POS. 7 POS. 8 POS. 10 POS. 14 POS. 16 POS.



KEYING ANGLES (RECEPTACLE FRONT VIEW):

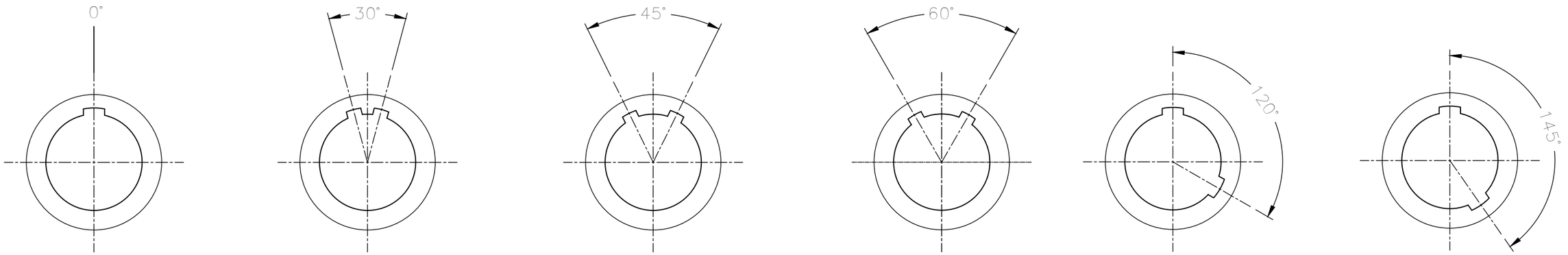

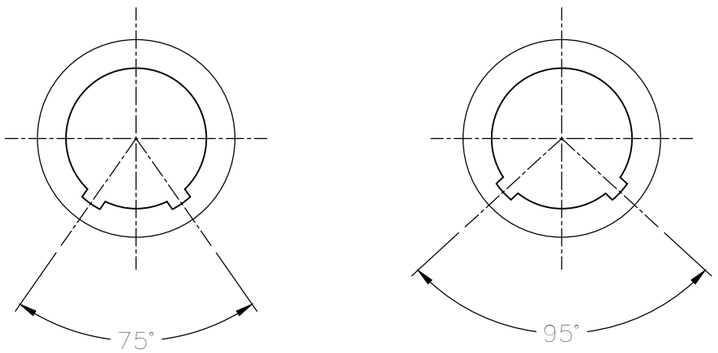

THIRD ANGLE PROJECTION		TOLERANCES UNLESS OTHERWISE SPECIFIED	
UNITS ■ mm □ INCH		0 PLC ± 1.00 1 PLC ± 0.50 2 PLC ± 0.25 3 PLC ± 4 PLC ±	
ANGLES 0 PLC ± 3 1 PLC ± 2			
APPROVED BY	JACK	DATE	2022-1-25
CHECKED BY	CHARLES	DATE	2022-1-25
DRAWN BY	ANDY	DATE	2022-1-25

Dongguan Circon Technology Co.,Ltd.

TITLE: 1K METAL CIRCULAR CONNECTOR
FIXED SOCKETS-FLANGED/WATERTIGHT

C	DRAWING NO.	A-M-401	REV. A0
	PART NO.	1KAFGXXXXX000	

REV.	REVISION DESCRIPTION	ECR/ECN NO.	DATE

SIZE: A3 SCALE: 1:1 SHEET: 2 OF 2