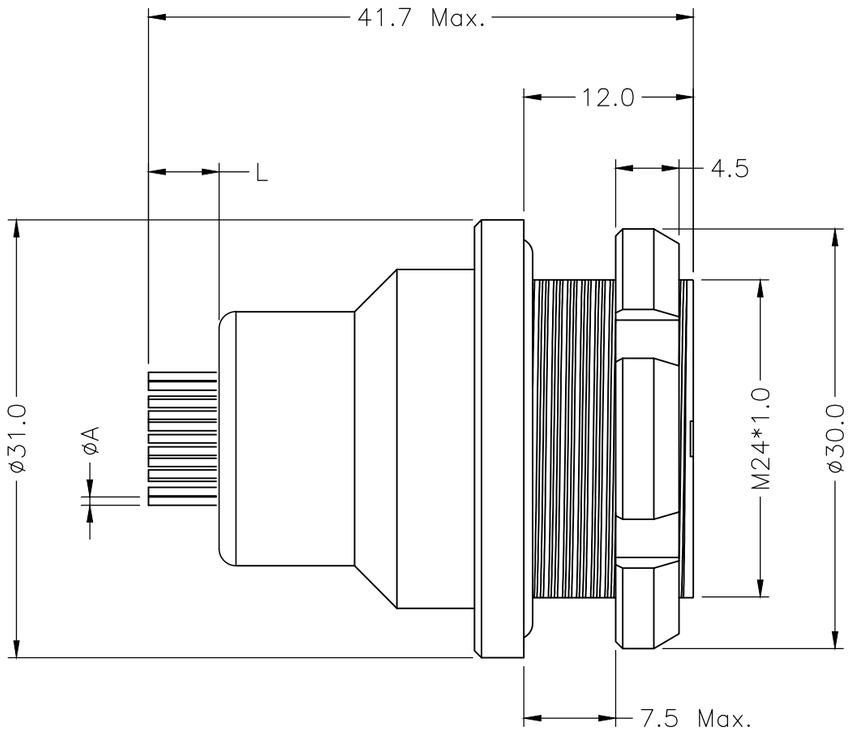


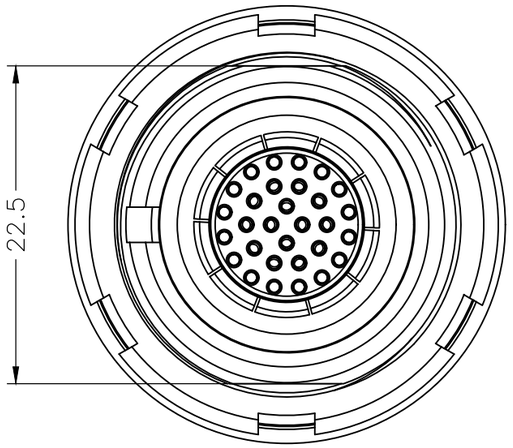


| POSITION | 3~18 | 20&32 |
|---|---|---|
| øA | 0.70 | 0.50 |
| L | 3.0 | 5.0 |

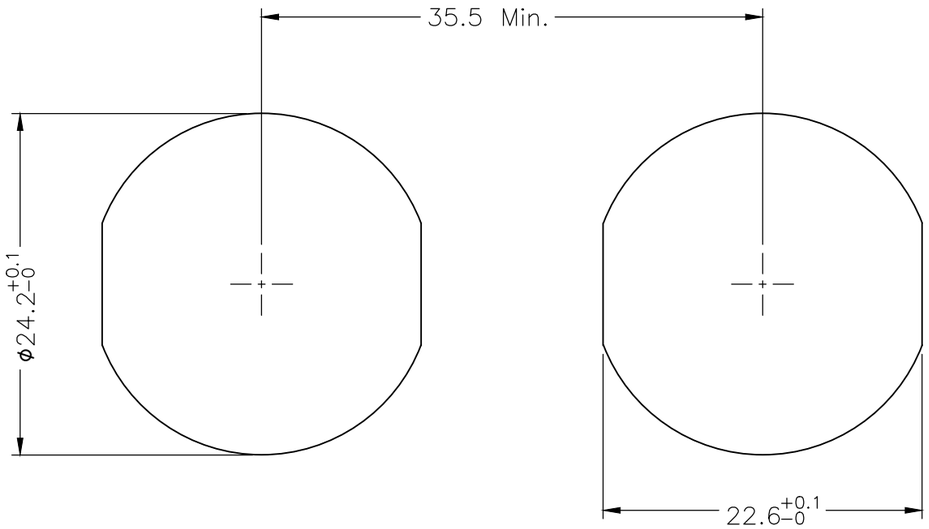


PANEL CUT−OUT

3K METAL CIRCULAR ASSEMBLY P/N DESCRIPTION :

3K A FU X X XX X 00 C
① ② ③ ④

① Insert
P=PEEK
1=PPS

② Plating
2=High Gold
A=Gold flash

③ Number of contacts
03=3Pin
⋮
32=32Pin

④ Keying

| | |
|---|---|
| G= 0° | D= 95° |
| A= 30° | E=120° |
| B= 45° | F=145° |
| C= 60° | L= 75° |

NOTE:

1. MATERIAL:

1.1.SHELL ASSEMBLY: COPPER ALLOY,OUTER SHELL AND NUT Cr PLATING, OTHER METALLIC COMPONENTS Ni PLATING

1.2.INSERT: THERMOPLASTIC,UL94V−0

1.3.CENTER CONTACT : COPPER ALLOY,Au PLATING

1.4.O−RING : ELASTOMER

2.NUMBER OF CONTACT : 3 TO 32 POSITION

3.RoHS DIRECTIVE COMPLIANCE

| | | | | | |
|---|---|---|---|---|---|
| THIRD ANGLE PROJECTION | | TOLERANCES UNLESS OTHERWISE SPECIFIED | | Dongguan Circon Technology Co.,Ltd. | |
| UNITS ■ mm □ INCH | | 0 PLC ± 1.00<br>1 PLC ± 0.50<br>2 PLC ± 0.25<br>3 PLC ±<br>4 PLC ± | | TITLE: 3K METAL CIRCULAR CONNECTOR FIXED SOCKETS−PCB CONTACTS/VACUUMTIGHT | |
| ANGLES 0 PLC ± 3<br>1 PLC ± 2 | | | | C | DRAWING NO. A−M−789 / PART NO. 3KAFUXXXXX00C / REV. A0 |
| APPROVED BY | JACK | DATE | 2026−3−28 | | |
| CHECKED BY | CHARLES | DATE | 2026−3−28 | | |
| DRAWN BY | ANDY | DATE | 2026−3−28 | SIZE: A3 | SCALE: 1:1 / SHEET: 1 OF 4 |

| REV. | REVISION DESCRIPTION | ECR/ECN NO. | DATE |
|---|---|---|---|

KEYING ANGLES (RECEPTACLE FRONT VIEW):

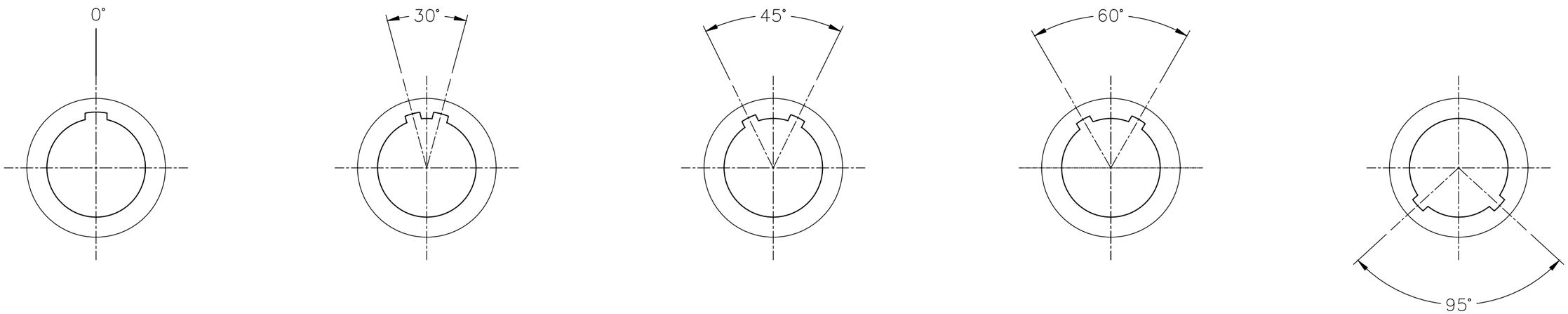


| | | | |
|---|---|---|---|
| THIRD ANGLE PROJECTION | | TOLERANCES UNLESS OTHERWISE SPECIFIED | 0 PLC ± 1.00<br>1 PLC ± 0.50<br>2 PLC ± 0.25<br>3 PLC ±<br>4 PLC ± |
| UNITS ■ mm □ INCH | | | |
| ANGLES 0 PLC ± 3<br>1 PLC ± 2 | | | |
| APPROVED BY | JACK | DATE | 2026-3-28 |
| CHECKED BY | CHARLES | DATE | 2026-3-28 |
| DRAWN BY | ANDY | DATE | 2026-3-28 |

Dongguan Circon Technology Co.,Ltd.

TITLE: 3K METAL CIRCULAR CONNECTOR
FIXED SOCKETS–PCB CONTACTS/VACUUMTIGHT

| | | | |
|---|---|---|---|
| C | DRAWING NO. | A–M–789 | REV. A0 |
| | PART NO. | 3KAFUXXXXX00C | |

SIZE: A3 | SCALE: 1:1 | SHEET: 2 OF 4

| REV. | REVISION DESCRIPTION | ECR/ECN NO. | DATE |
|---|---|---|---|

VIEW FROM TERMINATION SIDE PIN PART

3 POS.



4 POS.

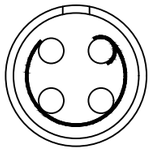

5 POS.

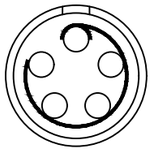

6 POS.

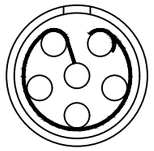

7 POS.

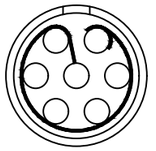

8 POS.

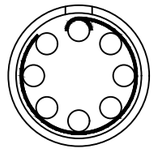

10 POS.



12 POS.

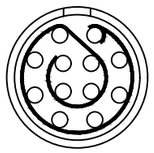

14 POS.



16 POS.



18 POS.

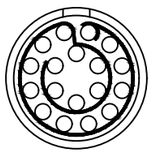

20 POS.

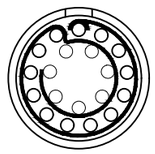

22 POS.



24 POS.



26 POS.

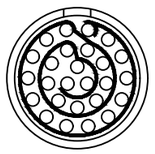

30 POS.

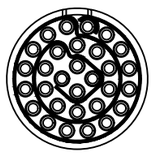

32 POS.

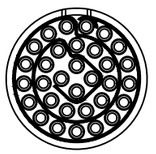

| | | | |
|---|---|---|---|
| THIRD ANGLE PROJECTION | | TOLERANCES UNLESS OTHERWISE SPECIFIED | |
| UNITS ■ mm □ INCH | | 0 PLC ± 1.00<br>1 PLC ± 0.50<br>2 PLC ± 0.25<br>3 PLC ±<br>4 PLC ± | |
| ANGLES 0 PLC ± 3<br>1 PLC ± 2 | | | |
| APPROVED BY | JACK | DATE | 2026-3-28 |
| CHECKED BY | CHARLES | DATE | 2026-3-28 |
| DRAWN BY | ANDY | DATE | 2026-3-28 |

Dongguan Circon Technology Co.,Ltd.

TITLE: 3K METAL CIRCULAR CONNECTOR
FIXED SOCKETS–PCB CONTACTS/VACUUMTIGHT

| | | | |
|---|---|---|---|
| C | DRAWING NO. | A–M–789 | REV. A0 |
| | PART NO. | 3KAFUXXXXX00C | |

SIZE: A3 | SCALE: 1:1 | SHEET: 3 OF 4

| REV. | REVISION DESCRIPTION | ECR/ECN NO. | DATE |
|---|---|---|---|

PCB DRILLING PATTEN

3 POS.

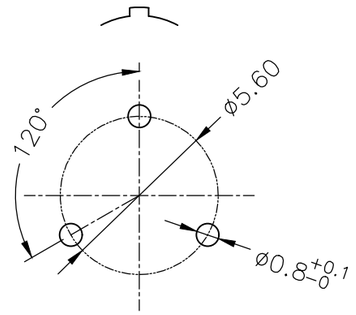


4 POS.

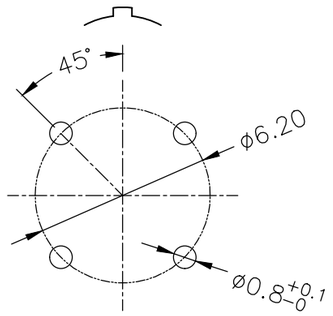


5 POS.

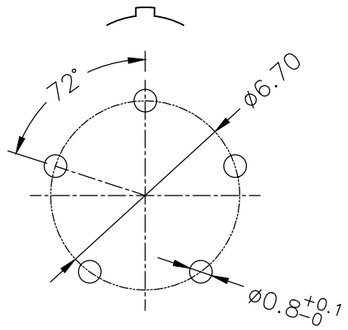


6 POS.

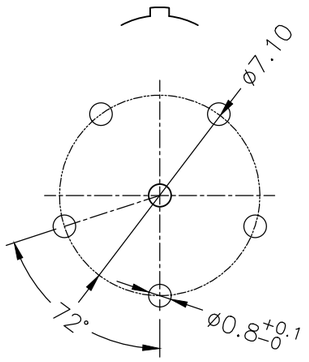


7 POS.

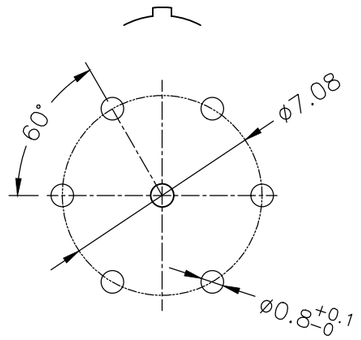


8 POS.

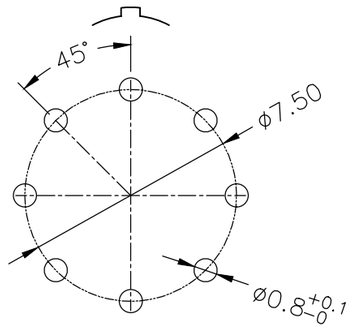


10 POS.

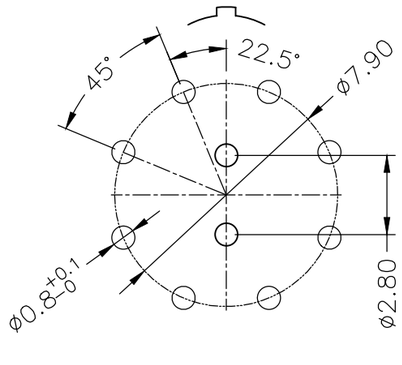


12 POS.

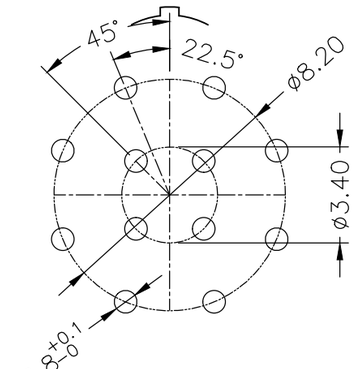


14 POS.

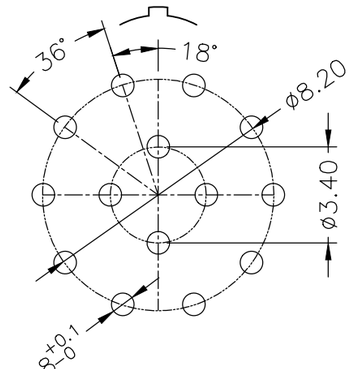


16 POS.

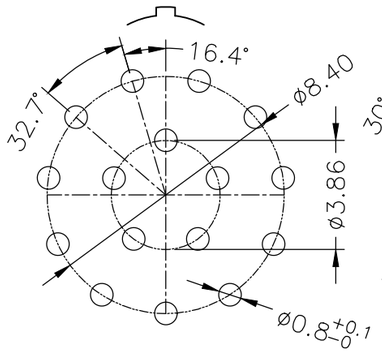


18 POS.

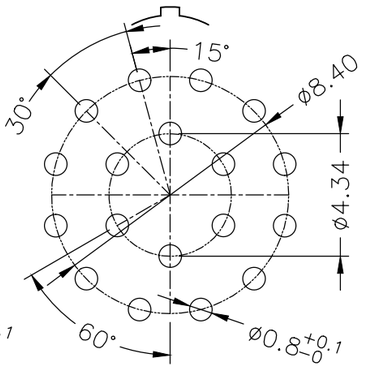


20 POS.

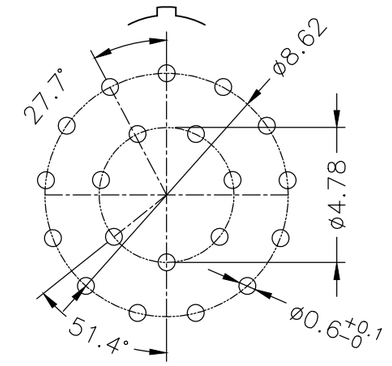


22 POS.

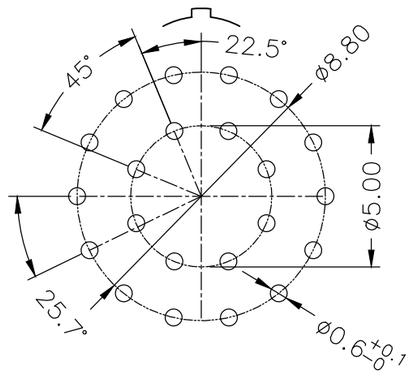


24 POS.

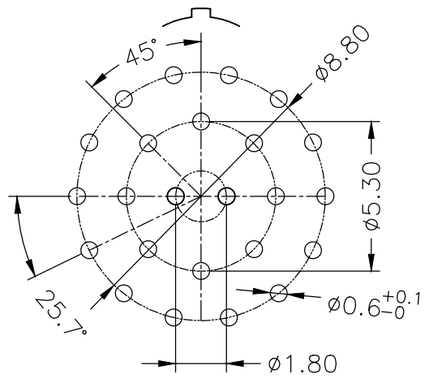


26 POS.

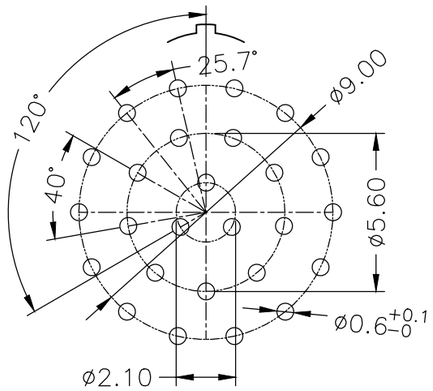


30 POS.

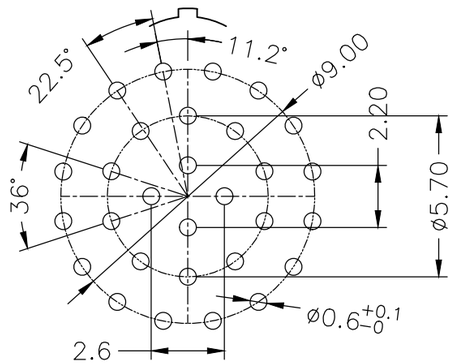


32 POS.

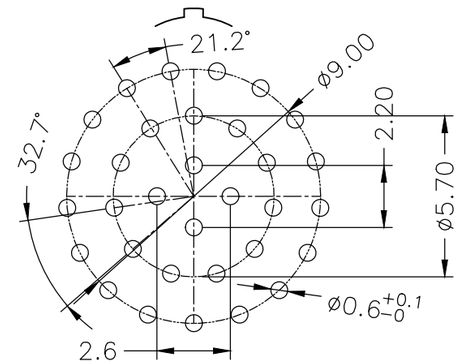


| | |
|---|---|
| THIRD ANGLE PROJECTION | TOLERANCES UNLESS OTHERWISE SPECIFIED |
| UNITS ■ mm □ INCH | 0 PLC ± 1.00<br>1 PLC ± 0.50<br>2 PLC ± 0.25<br>3 PLC ±<br>4 PLC ± |
| ANGLES 0 PLC ± 3<br>1 PLC ± 2 | |

Dongguan Circon Technology Co.,Ltd.

TITLE: 3K METAL CIRCULAR CONNECTOR
FIXED SOCKETS–PCB CONTACTS/VACUUMTIGHT

| | | | | | |
|---|---|---|---|---|---|
| APPROVED BY | JACK | DATE | 2026–3–28 | C | DRAWING NO. A–M–789 REV. A0 |
| CHECKED BY | CHARLES | DATE | 2026–3–28 | | PART NO. 3KAFUXXXXX00C |
| DRAWN BY | ANDY | DATE | 2026–3–28 | SIZE: A3 | SCALE: 1:1 SHEET: 4 OF 4 |

| REV. | REVISION DESCRIPTION | ECR/ECN NO. | DATE |
|---|---|---|---|