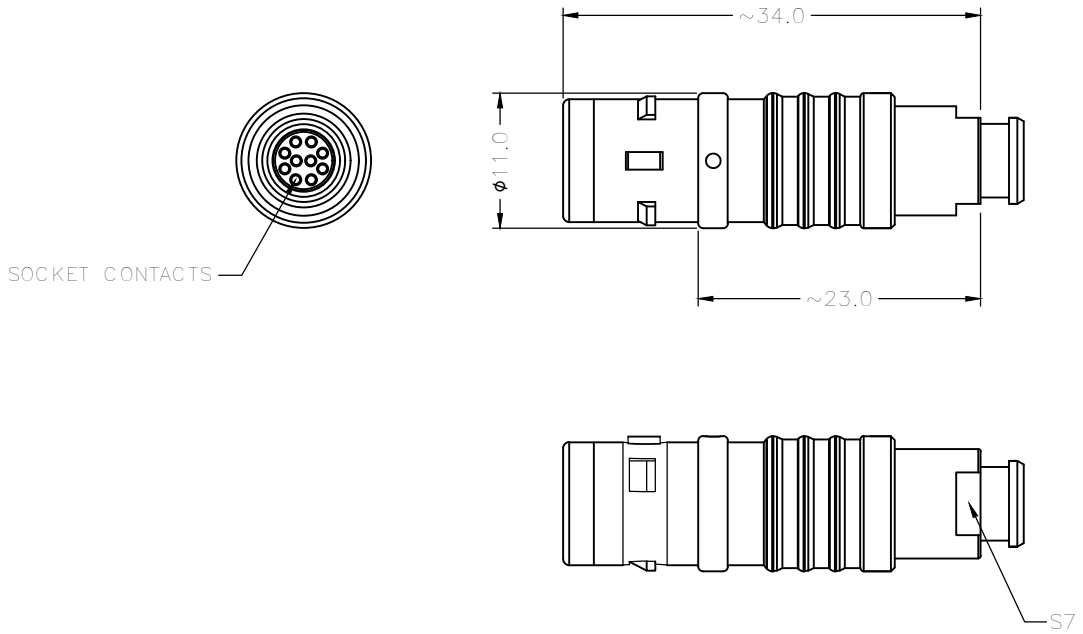

OK METAL CIRCULAR ASSEMBLY P/N DESCRIPTION :

OK A M2 X X XX X XX B
① ② ③ ④ ⑤

① Insert
P=PEEK
1=PPS

② Plating
2=High Gold
A=Gold flash

③ Number of contacts
02=2Pin
:
:
:
09=9Pin

④ Keying
G= 0° D= 95°
A= 30° E=120°
B =45° F=145°
C =60° L= 75°

⑤ Cable collet
10=1.0mm (Cable ø1.0~1.2mm)
15=1.5mm (Cable ø1.3~1.5mm)
20=2.0mm (Cable ø1.6~2.0mm)
25=2.5mm (Cable ø2.1~2.5mm)
30=3.0mm (Cable ø2.6~3.0mm)
35=3.5mm (Cable ø3.1~3.5mm)
40=4.0mm (Cable ø3.6~4.0mm)
45=4.5mm (Cable ø4.1~4.5mm)
50=5.0mm (Cable ø4.6~5.0mm)

NOTE:

1. MATERIAL:

1.1.SHELL ASSEMBLY: COPPER ALLOY,OUTER SHELL AND COLLET NUT Cr PLATING, OTHER METALLIC COMPONENTS Ni PLATING

1.2.INSERT: THERMOPLASTIC,UL94V-0

1.3.CENTER CONTACT : COPPER ALLOY,Au PLATING

1.4.GASKET : ELASTOMER

2.NUMBER OF CONTACT : 2 TO 9 POSITION

3.RoHS DIRECTIVE COMPLIANCE

REV.	REVISION DESCRIPTION	ECR/ECN NO.	DATE

THIRD ANGLE PROJECTION		TOLERANCES UNLESS OTHERWISE SPECIFIED	
UNITS ■ mm □ INCH		0 PLC ± 1.00 1 PLC ± 0.50 2 PLC ± 0.25 3 PLC ± 4 PLC ±	
ANGLES 0 PLC ± 3 1 PLC ± 2			
APPROVED BY	JACK	DATE	2021-6-29
CHECKED BY	CHARLES	DATE	2021-6-29
DRAWN BY	ANDY	DATE	2021-6-29

Dongguan Circon Technology Co.,Ltd.

TITLE: 0K METAL CIRCULAR CONNECTOR
STRAIGHT PLUGS-SOCKET CONTACTS

C	DRAWING NO.	A-M-238	REV. A0
	PART NO.	0KAM2XXXXXXXB	

SIZE: A3 | SCALE: 1:1 | SHEET: 1 OF 2

VIEW FROM TERMINATION SIDE PIN PART

2 POS. 3 POS. 4 POS. 5 POS. 6 POS. 7 POS. 9 POS.



KEYING (PLUG FRONT VIEW):

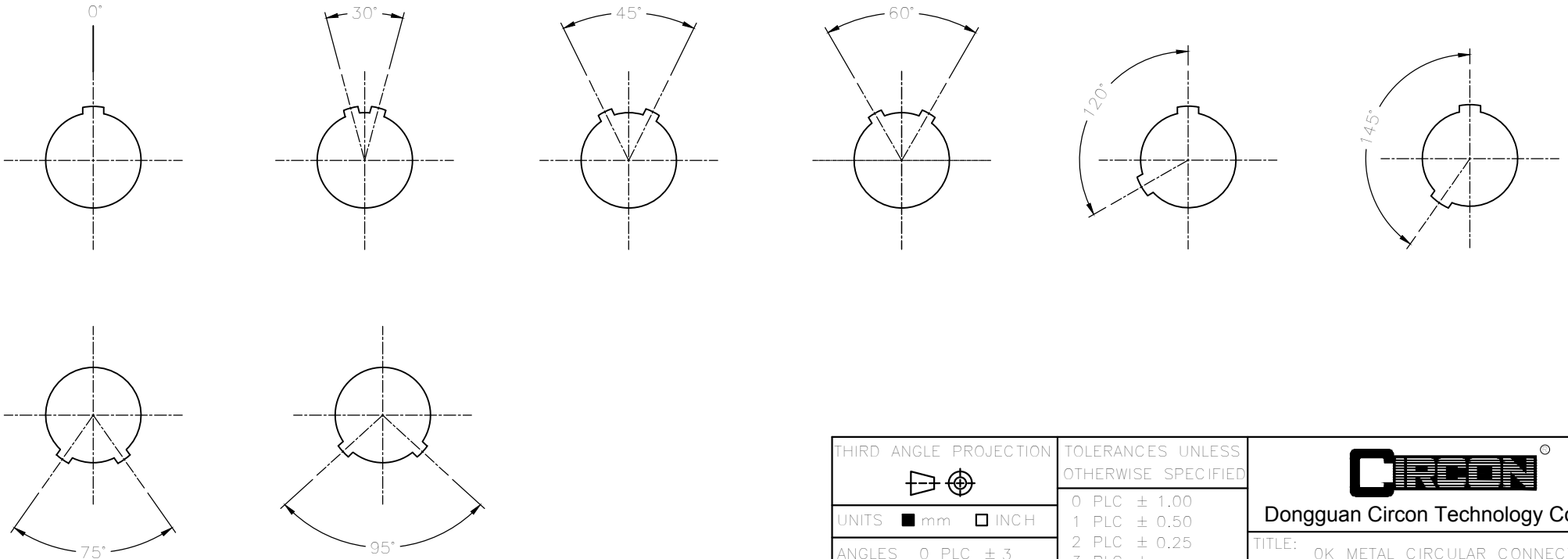

THIRD ANGLE PROJECTION		TOLERANCES UNLESS OTHERWISE SPECIFIED	
UNITS ■ mm □ INCH		0 PLC ± 1.00 1 PLC ± 0.50 2 PLC ± 0.25 3 PLC ± 4 PLC ±	
ANGLES 0 PLC ± 3 1 PLC ± 2			
APPROVED BY	JACK	DATE	2021-6-29
CHECKED BY	CHARLES	DATE	2021-6-29
DRAWN BY	ANDY	DATE	2021-6-29

Dongguan Circon Technology Co.,Ltd.

TITLE: 0K METAL CIRCULAR CONNECTOR
STRAIGHT PLUGS-SOCKET CONTACTS

C	DRAWING NO.	A-M-238	REV. A0
	PART NO.	0KAM2XXXXXXXB	

REV.	REVISION DESCRIPTION	ECR/ECN NO.	DATE

SIZE: A3 SCALE: 1:1 SHEET: 2 OF 2