2K MRTAL CIRCULAR ASSEMBLY P/N DESCRIPTION :

2K A S1 X X XX X XX B
① ② ③ ④ ⑤

① Insert
P=PEEK
1=PPS

② Plating
2=High Gold
A=Gold flash

③ Number of contacts
02=2Pin
⋮
32=32Pin

④ Keying
G=0° C=60° F=145°
A=30° D=95° L=75°
B=45° E=120°

⑤ Cable collet
15=1.5mm (Cableø1.3~1.5mm)
20=2.0mm (Cableø1.6~2.0mm)
25=2.5mm (Cableø2.1~2.5mm)
30=3.0mm (Cableø2.6~3.0mm)
35=3.5mm (Cableø3.1~3.5mm)
40=4.0mm (Cableø3.6~4.0mm)
45=4.5mm (Cableø4.1~4.5mm)
50=5.0mm (Cableø4.6~5.0mm)
55=5.5mm (Cableø5.1~5.5mm)
60=6.0mm (Cableø5.6~6.0mm)
65=6.5mm (Cableø6.1~6.5mm)
70=7.0mm (Cableø6.6~7.0mm)
75=7.5mm (Cableø7.1~7.5mm)
80=8.0mm (Cableø7.6~8.0mm)
85=8.5mm (Cableø8.1~8.5mm)
90=9.0mm (Cableø8.6~9.0mm)
95=9.5mm (Cableø9.1~9.5mm)
10=10.0mm(Cableø9.6~10.0mm)
11=10.5mm(Cableø10.1~10.5mm)

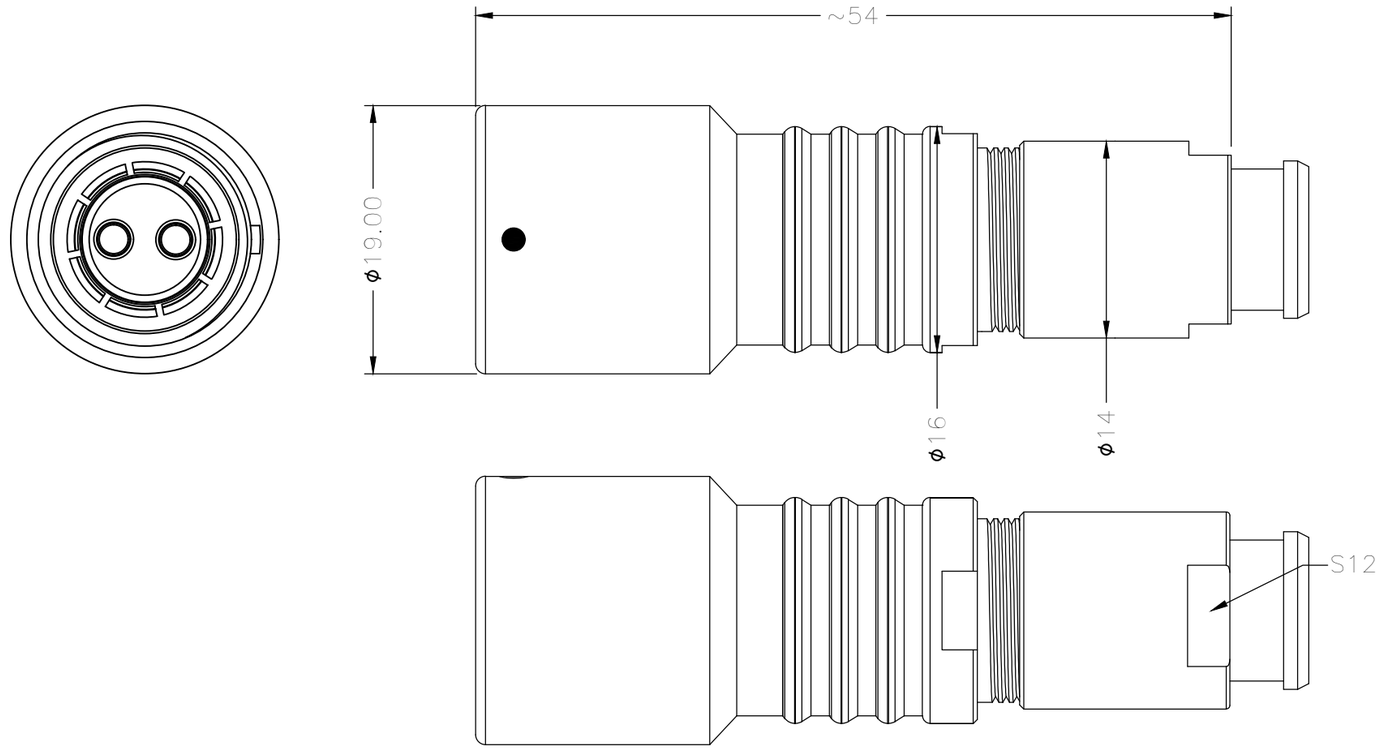

NOTE:

1. MATERIAL:

1.1.SHELL ASSEMBLY: COPPER ALLOY,OUTER SHELL Cr PLATING,
OTHER METALLIC COMPONENTS Ni PLATING

1.2.INSERT: THERMOPLASTIC,UL94V-0

1.3.CENTER CONTACT : COPPER ALLOY,Au PLATING

1.4.O-RING : ELASTOMER

2.NUMBER OF CONTACT : 2 TO 32 POSITION

3.RoHS DIRECTIVE COMPLIANCE

THIRD ANGLE PROJECTION	TOLERANCES UNLESS OTHERWISE SPECIFIED	CIRCON® Dongguan Circon Technology Co.,Ltd.	
UNITS ■ mm □ INCH	0 PLC ± 1.00 1 PLC ± 0.50 2 PLC ± 0.25 3 PLC ± 4 PLC ±	TITLE: 2K METAL CIRCULAR CONNECTOR FREE SOCKETS	
ANGLES 0 PLC ± 3 1 PLC ± 2			
APPROVED BY JACK	DATE 2018-8-28	C DRAWING NO. A-M-056	REV. A0
CHECKED BY CHARLES	DATE 2018-8-28	PART NO. 2KAS1XXXXXXXB	
DRAWN BY ANDY	DATE 2018-8-28	SIZE: A3 SCALE: 1:1	SHEET: 1 OF 3

REV.	REVISION DESCRIPTION	ECR/ECN NO.	DATE

KEYING ANGLES (RECEPTACLE FRONT VIEW):

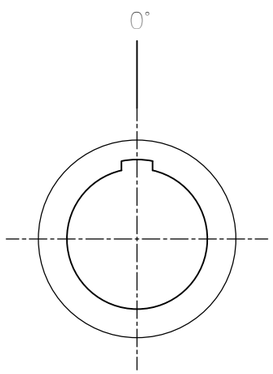

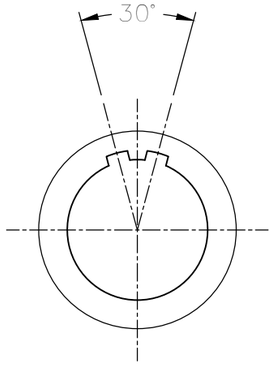

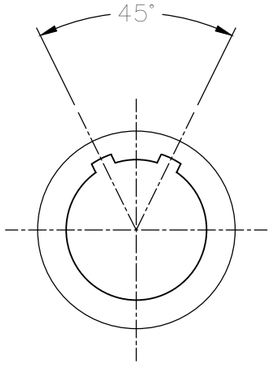

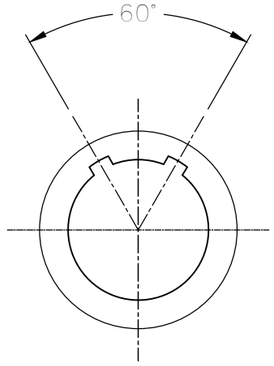

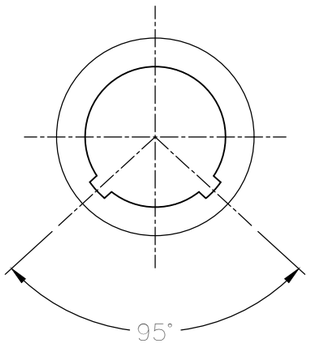

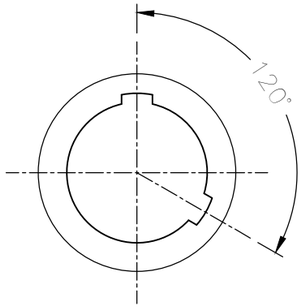

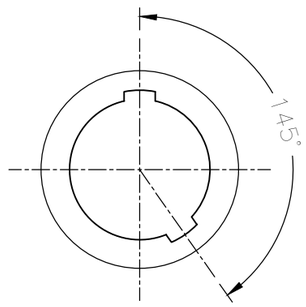

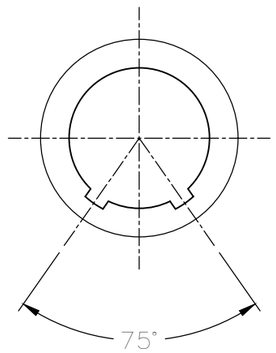

THIRD ANGLE PROJECTION		TOLERANCES UNLESS OTHERWISE SPECIFIED	
UNITS ■ mm □ INCH		0 PLC ± 1.00 1 PLC ± 0.50 2 PLC ± 0.25 3 PLC ± 4 PLC ±	
ANGLES 0 PLC ± 3 1 PLC ± 2			
APPROVED BY	JACK	DATE	2018-8-28
CHECKED BY	CHARLES	DATE	2018-8-28
DRAWN BY	ANDY	DATE	2018-8-28

Dongguan Circon Technology Co.,Ltd.

TITLE: 2K METAL CIRCULAR CONNECTOR FREE SOCKETS

C	DRAWING NO.	A-M-056	REV. A0
	PART NO.	2KAS1XXXXXXXB	
SIZE: A3	SCALE: 1:1	SHEET: 2 OF 3	

REV.	REVISION DESCRIPTION	ECR/ECN NO.	DATE

VIEW FROM TERMINATION SIDE PIN PART

2 POS.

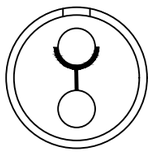

3 POS.



4 POS.

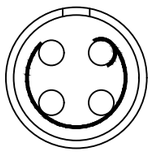

5 POS.

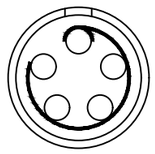

6 POS.

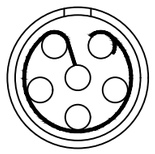

7 POS.

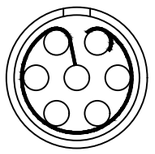

8 POS.

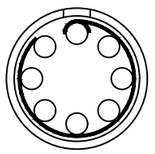

10 POS.

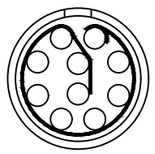

12 POS.

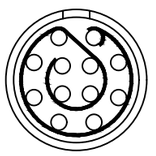

14 POS.



16 POS.



18 POS.

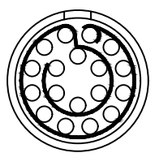

19 POS.

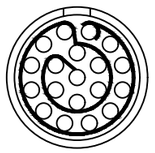

26 POS.

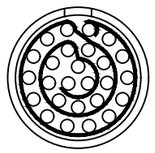

32 POS.

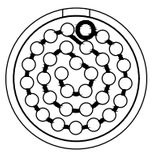

REV.	REVISION DESCRIPTION	ECR/ECN NO.	DATE	DRAWN BY	ANDY	DATE	2018-8-28

THIRD ANGLE PROJECTION

UNITS ■ mm □ INCH

ANGLES 0 PLC ± 3
1 PLC ± 2

TOLERANCES UNLESS OTHERWISE SPECIFIED

0 PLC ± 1.00
1 PLC ± 0.50
2 PLC ± 0.25
3 PLC ±
4 PLC ±

APPROVED BY	JACK	DATE	2018-8-28
CHECKED BY	CHARLES	DATE	2018-8-28

Dongguan Circon Technology Co.,Ltd.

TITLE: 2K METAL CIRCULAR CONNECTOR FREE SOCKETS

C	DRAWING NO.	A-M-056	REV. A0
	PART NO.	2KAS1XXXXXXXB	

SIZE: A3 | SCALE: 1:1 | SHEET: 3 OF 3