

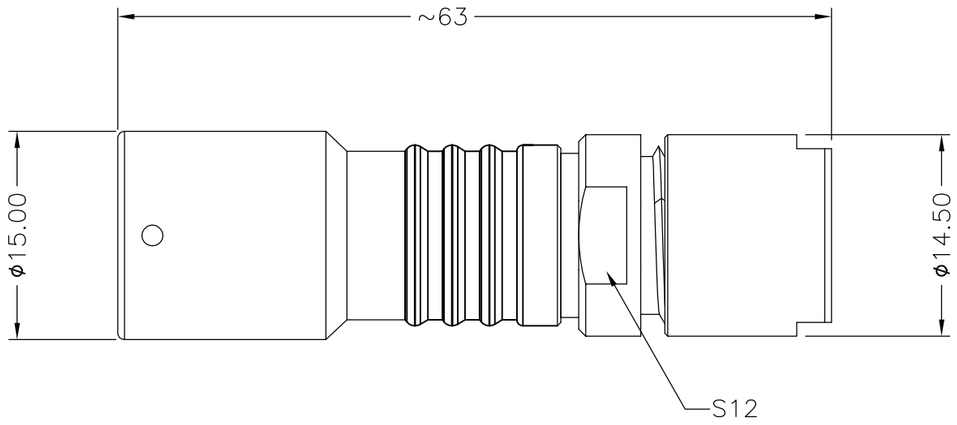

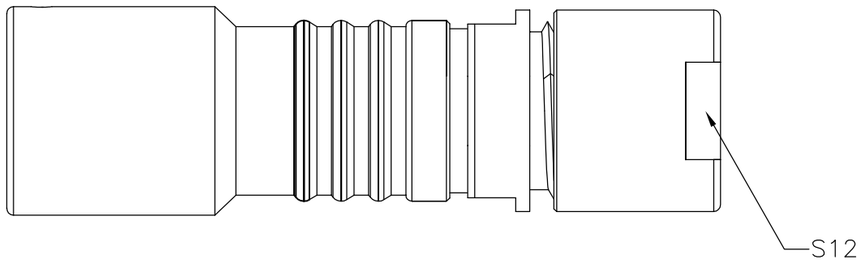

1K METAL CIRCULAR ASSEMBLY P/N DESCRIPTION :

1K A S2 X X XX X XX A
① ② ③ ④ ⑤

① Insert
P=PEEK
1=PPS

② Plating
2=High Gold
A=Gold flash

③ Number of contacts
02=2Pin
⋮
16=16Pin

④ Keying
G= 0° D= 95°
A= 30° E=120°
B= 45° F=145°
C= 60° L= 75°

⑤ Cable collet
70=7.0mm (Cable⌀6.2~7.0mm)
75=7.5mm (Cable⌀7.1~7.5mm)
80=8.0mm (Cable⌀7.6~8.0mm)
85=8.5mm (Cable⌀8.1~8.5mm)

NOTE:

1. MATERIAL:

1.1.SHELL ASSEMBLY: COPPER ALLOY,OUTER SHELL AND COLLET NUT Cr PLATING,
OTHER METALLIC COMPONENTS Ni PLATING

1.2.INSERT: THERMOPLASTIC,UL94V-0

1.3.CENTER CONTACT : COPPER ALLOY,Au PLATING

1.4.O-RING : ELASTOMER

2.NUMBER OF CONTACT : 2 TO 16 POSITION

3.RoHS DIRECTIVE COMPLIANCE

REV.	REVISION DESCRIPTION	ECR/ECN NO.	DATE

THIRD ANGLE PROJECTION

UNITS ■ mm □ INCH

ANGLES 0 PLC ± 3°
1 PLC ± 2°

TOLERANCES UNLESS OTHERWISE SPECIFIED
0 PLC ± 1.00
1 PLC ± 0.50
2 PLC ± 0.25
3 PLC ±
4 PLC ±

APPROVED BY	JACK	DATE	2022-5-23
CHECKED BY	CHARLES	DATE	2022-5-23
DRAWN BY	ANDY	DATE	2022-5-23

Dongguan Circon Technology Co.,Ltd.

TITLE: 1K METAL CIRCULAR CONNECTOR FREE SOCKETS

C	DRAWING NO.	A-M-293	REV. A0
	PART NO.	1KAS2XXXXXXXA	

SIZE: A3 | SCALE: 1:1 | SHEET: 1 OF 2

VIEW FROM TERMINATION SIDE PIN PART

2 POS. 3 POS. 4 POS. 5 POS. 6 POS. 7 POS. 8 POS. 10 POS. 14 POS. 16 POS.



KEYING ANGLES (RECEPTACLE FRONT VIEW):

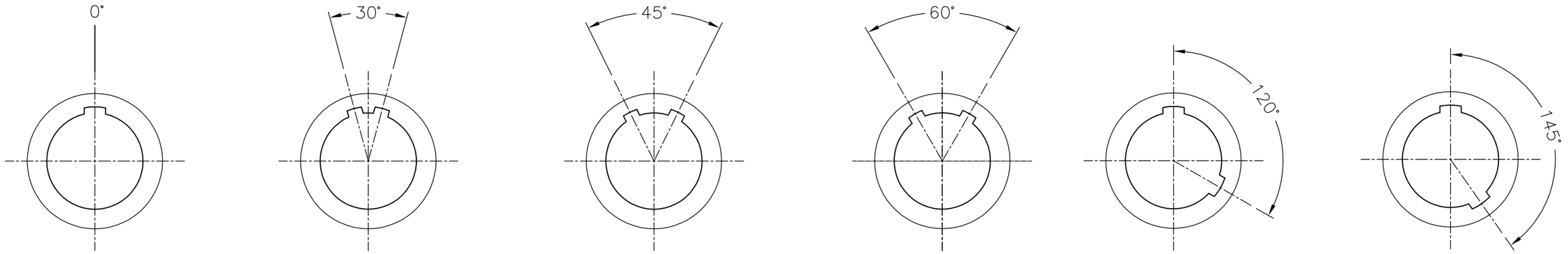

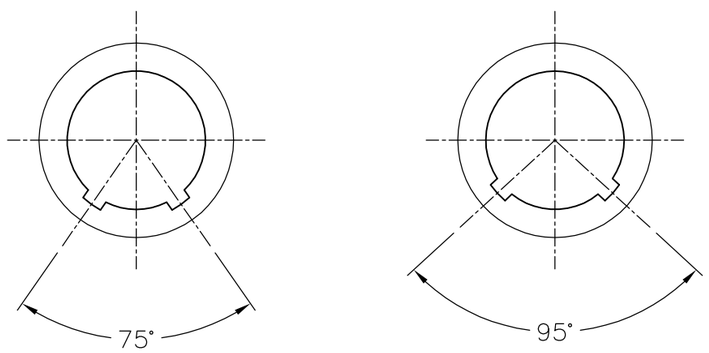

THIRD ANGLE PROJECTION		TOLERANCES UNLESS OTHERWISE SPECIFIED		Dongguan Circon Technology Co.,Ltd.			
UNITS ■ mm □ INCH		0 PLC ± 1.00 1 PLC ± 0.50 2 PLC ± 0.25 3 PLC ± 4 PLC ±		TITLE: 1K METAL CIRCULAR CONNECTOR FREE SOCKETS			
ANGLES 0 PLC ± 3° 1 PLC ± 2°				C	DRAWING NO.	A-M-293	REV. A0
					PART NO.	1KAS2XXXXXXXA	
APPROVED BY	JACK	DATE	2022-5-23	SIZE: A3	SCALE: 1:1	SHEET: 2 OF 2	
CHECKED BY	CHARLES	DATE	2022-5-23				
DRAWN BY	ANDY	DATE	2022-5-23				

REV.	REVISION DESCRIPTION	ECR/ECN NO.	DATE