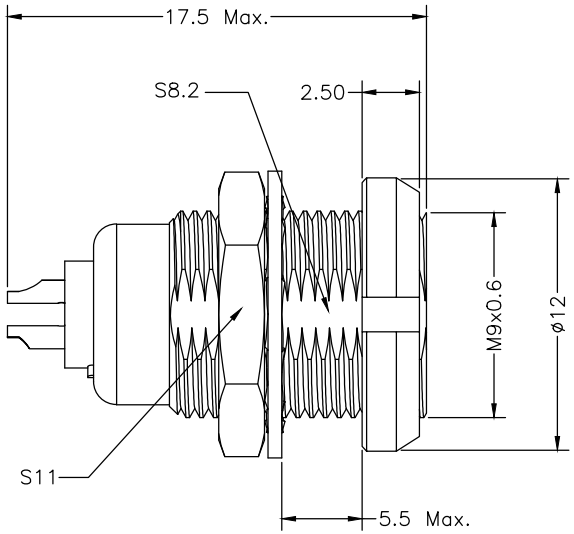

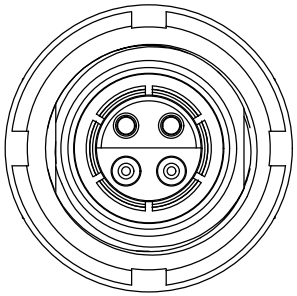

0S MRTAL CIRCULAR ASSEMBLY P/N DESCRIPTION :

0S A F1 X X XX 0 00 C
① ② ③

① Insert
P=PEEK
S=PPS

② Plating
2=High Gold
A=Gold flash

③ Number of contacts
02=2Pin
⋮
06=6Pin



VIEW FROM TERMINATION SIDE SOCKET PART

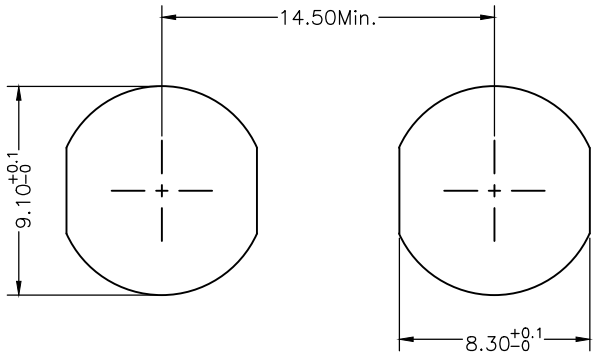

PANEL CUT-OUT

NOTE:

1. MATERIAL:

1.1.SHELL ASSEMBLY: COPPER ALLOY,OUTER SHELL AND COLLET
OTHER METALLIC COMPONENTS Ni PLATING

1.2.INSERT: THERMOPLASTIC,UL94V-0

1.3.CENTER CONTACT : COPPER ALLOY,Au PLATING

2.NUMBER OF CONTACT : 2 TO 6 POSITION

3.RoHS DIRECTIVE COMPLIANCE

REV.	REVISION DESCRIPTION	ECR/ECN NO.	DATE

THIRD ANGLE PROJECTION		TOLERANCES UNLESS OTHERWISE SPECIFIED	
UNITS ■ mm □ INCH		0 PLC ± 1.00 1 PLC ± 0.50 2 PLC ± 0.25 3 PLC ± 4 PLC ±	
ANGLES 0 PLC ± 3 1 PLC ± 2			
APPROVED BY	JACK	DATE	2019-1-4
CHECKED BY	CHARLES	DATE	2019-1-4
DRAWN BY	ANDY	DATE	2019-1-4

CIRCON®
Dongguan Circon Technology Co.,Ltd.

TITLE: 0S METAL CIRCULAR CONNECTOR
FIXED SOCKET

C	DRAWING NO.	A-M-052	REV. A0
	PART NO.	0SAF1XXXX000C	

SIZE: A3 | SCALE: 1:1 | SHEET: 1 OF 1