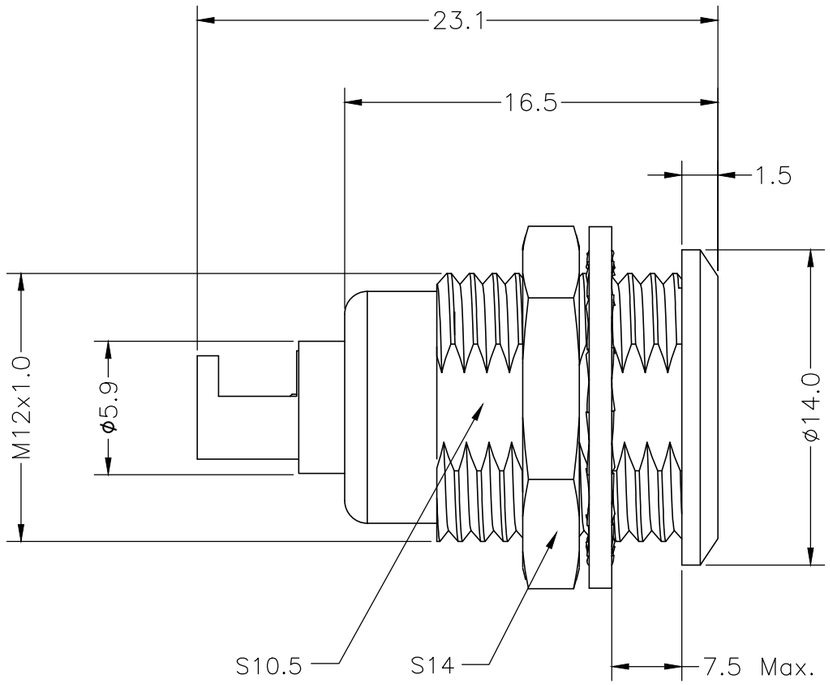

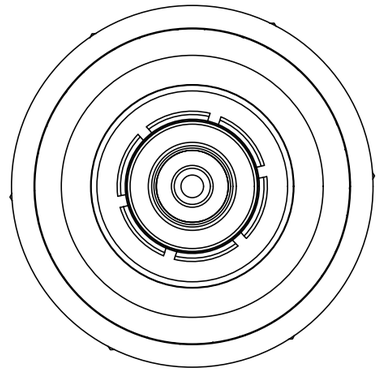

1S MRTAL CIRCULAR ASSEMBLY P/N DESCRIPTION :

1S A F2 X X XX 0 00 C
① ② ③

① Insert
P=PEEK
S=PPS

② Plating
2=High Gold
A=Gold flash

③ Number of contacts
65=1Pin Triax contact

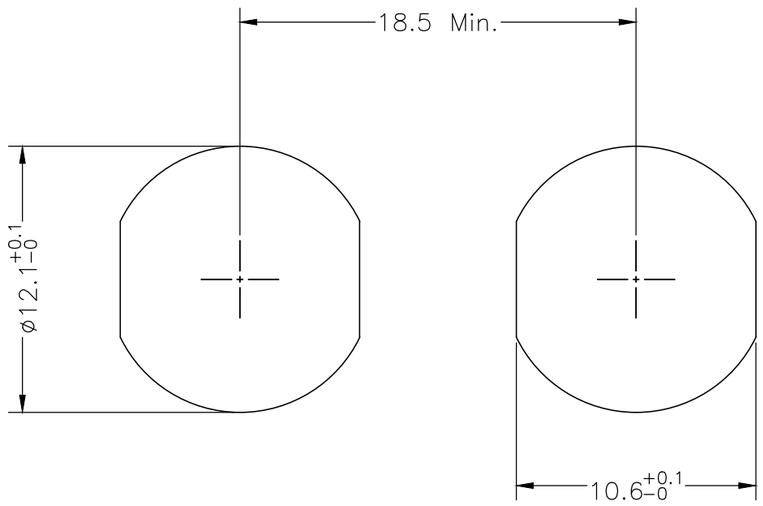

PANEL CUT-OUT

NOTE:

1. MATERIAL:

1.1.SHELL ASSEMBLY: COPPER ALLOY,Cr PLATING
OTHER METALLIC COMPONENTS Ni PLATING

1.2.INSERT: THERMOPLASTIC,UL94V-0

1.3.CENTER CONTACT : COPPER ALLOY,Au PLATING

2.RoHS DIRECTIVE COMPLIANCE

THIRD ANGLE PROJECTION		TOLERANCES UNLESS OTHERWISE SPECIFIED		CIRCON® Dongguan Circon Technology Co.,Ltd.			
UNITS ■ mm □ INCH		0 PLC ± 1.00 1 PLC ± 0.50 2 PLC ± 0.25 3 PLC ± 4 PLC ±		TITLE: 1S METAL CIRCULAR CONNECTOR FIXED SOCKET-TRIAX CONTACT			
ANGLES 0 PLC ± 3° 1 PLC ± 2°							
APPROVED BY	JACK	DATE	2024-1-28	C	DRAWING NO.	A-M-490	REV. A0
CHECKED BY	CHARLES	DATE	2024-1-28		PART NO.	1SAF2XXXX000C	
DRAWN BY	ANDY	DATE	2024-1-28	SIZE: A3	SCALE: 1:1	SHEET: 1 OF 1	

REV.	REVISION DESCRIPTION	ECR/ECN NO.	DATE