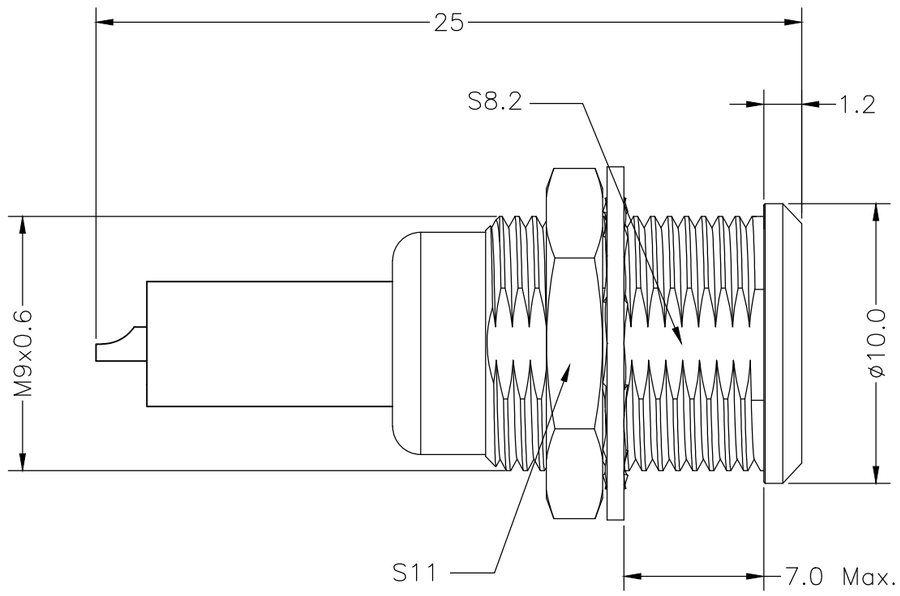

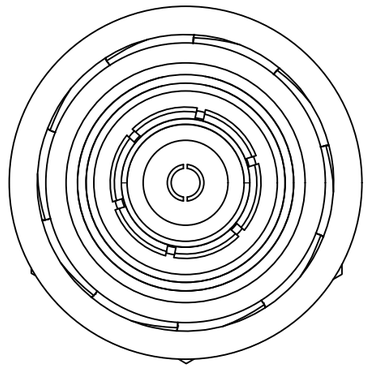

0S MRTAL CIRCULAR ASSEMBLY P/N DESCRIPTION :

0S A F2 X X XX 0 00 C
① ② ③

① Insert
P=PEEK
S=PPS

② Plating
2=High Gold
A=Gold flash

③ Number of contacts
C4=1Pin High-Voltage

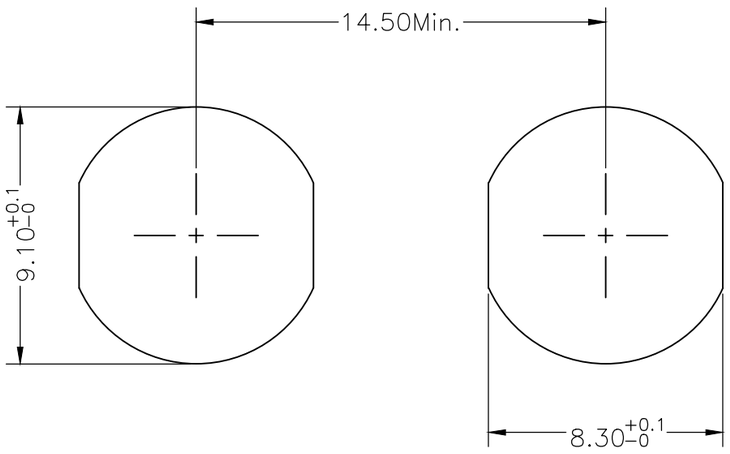

PANEL CUT-OUT

NOTE:

1. MATERIAL:

1.1.SHELL ASSEMBLY: COPPER ALLOY,OUTER SHELL AND COLLET OTHER METALLIC COMPONENTS Ni PLATING

1.2.INSERT: THERMOPLASTIC,UL94V-0

1.3.CENTER CONTACT : COPPER ALLOY,Au PLATING

2.RoHS DIRECTIVE COMPLIANCE

REV.	REVISION DESCRIPTION	ECR/ECN NO.	DATE	DRAWN BY	ANDY	DATE	2022-11-30

THIRD ANGLE PROJECTION

UNITS ■ mm □ INCH

ANGLES 0 PLC ± 3°
1 PLC ± 2°

TOLERANCES UNLESS OTHERWISE SPECIFIED
0 PLC ± 1.00
1 PLC ± 0.50
2 PLC ± 0.25
3 PLC ±
4 PLC ±

APPROVED BY	JACK	DATE	2022-11-30
CHECKED BY	CHARLES	DATE	2022-11-30

Dongguan Circon Technology Co.,Ltd.

TITLE: 0S METAL CIRCULAR CONNECTOR
FIXED SOCKET-HIGH VOLTAGE

C	DRAWING NO.	A-M-331	REV. A0
	PART NO.	0SAF2XXXX000C	

SIZE: A3 | SCALE: 1:1 | SHEET: 1 OF 1