NOTE:

1. MATERIAL:

1.1.OUTER SHELL:COPPER ALLOY,Cr PLATING

1.2.NUT S11:COPPER ALLOY,Cr PLATING

1.3.NUT S9:COPPER ALLOY,Cr PLATING

1.4.ELBOW:COPPER ALLOY,Cr PLATING

1.5.OTHER METALLIC COMPONENTS:COPPER ALLOY,Ni PLATING

1.6.INSERT: THERMOPLASTIC,UL94V-0

1.7.CENTER CONTACT: COPPER ALLOY,Au PLATING

2.RoHS DIRECTIVE COMPLIANCE

3.1S METAL CIRCULAR ASSEMBLY P/N DESCRIPTION:

1S	A	M3	P	X	XX	0	XX	A
				①	②		③	

① Plating

2=High Gold

A=Gold flash

② Number of contacts

50=1Pin 50 Ohms coaxial contact

③ Cable collet

42=4.2mm (Cable⌀3.2~4.2mm)

52=5.2mm (Cable⌀4.2~5.2mm)

62=6.2mm (Cable⌀5.2~6.2mm)

72=7.2mm (Cable⌀6.2~7.2mm)

76=7.6mm (Cable⌀7.2~7.6mm)

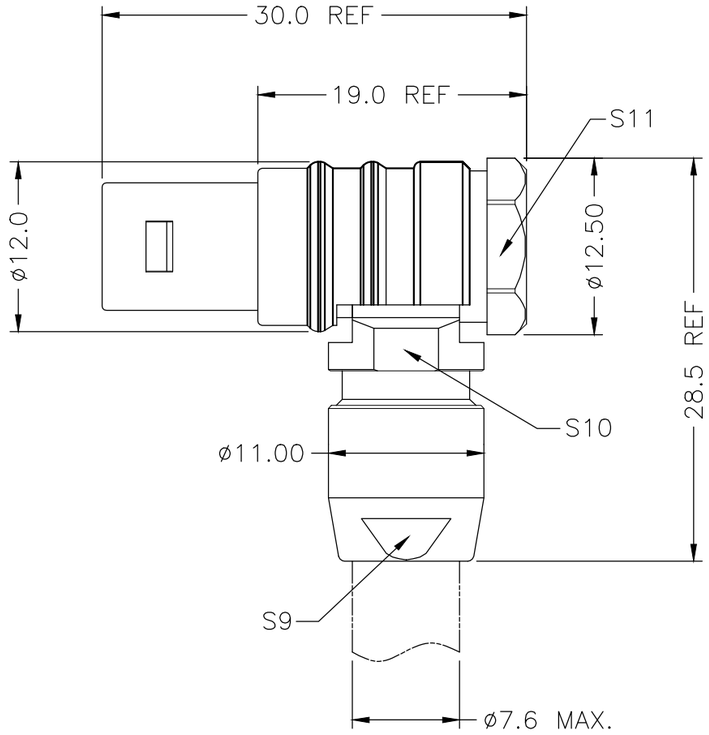

THIRD ANGLE PROJECTION		TOLERANCES UNLESS OTHERWISE SPECIFIED		Dongguan Circon Technology Co.,Ltd.			
UNITS ■ mm □ INCH		0 PLC ± 1.00 1 PLC ± 0.50 2 PLC ± 0.25 3 PLC ± 4 PLC ±		TITLE: 1S METAL CIRCULAR CONNECTOR 90° PLUGS-COAXIAL 50 OHMS			
ANGLES 0 PLC ± 3 1 PLC ± 2							
APPROVED BY	JACK	DATE	2024-6-20	C	DRAWING NO.	A-M-528	REV. A0
CHECKED BY	CHARLES	DATE	2024-6-20		PART NO.	1SAM3XXXXXXXA	
DRAWN BY	ANDY	DATE	2024-6-20	SIZE: A3	SCALE: 1:1	SHEET: 1 OF 1	

REV.	REVISION DESCRIPTION	ECR/ECN NO.	DATE