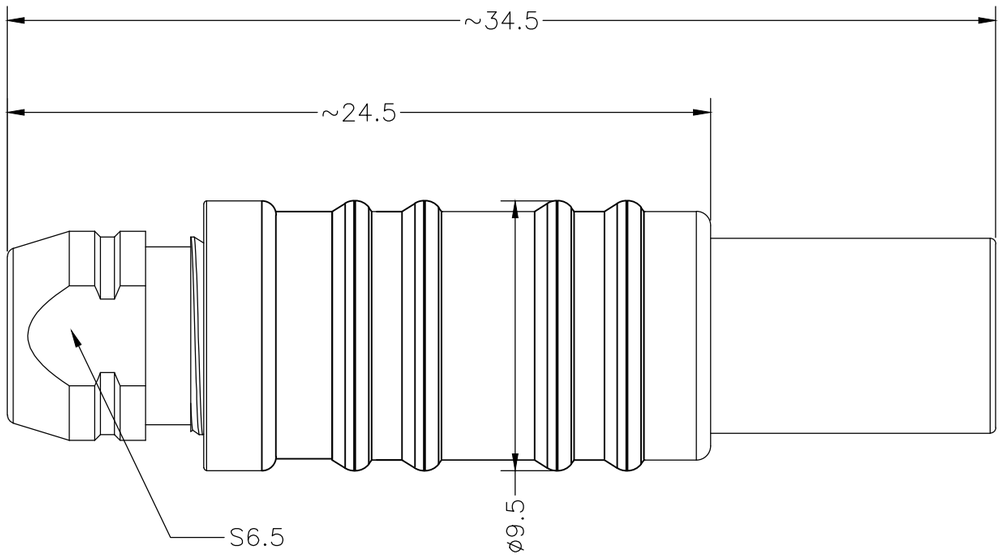

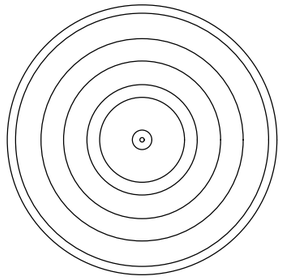

OS METAL CIRCULAR ASSEMBLY P/N DESCRIPTION :

OS A M4 X X XX 0 XX A
① ② ③ ④

① Insert
P=PEEK
S=PPS

② Plating
2=High Gold
A=Gold flash

③ Number of contacts
C5=1pin Low-Voltage

④ Cable collet
22=2.2mm (Cable ø>1.3~2.2mm)
32=3.2mm (Cable ø>2.2~3.2mm)
37=3.7mm (Cable ø>3.2~3.7mm)
44=4.4mm (Cable ø>3.7~4.4mm)

NOTE:

1. MATERIAL:

1.1.SHELL ASSEMBLY: COPPER ALLOY,OUTER SHELL AND COLLET NUT
Cr PLATING, OTHER METALLIC COMPONENTS Ni PLATING

1.2.INSERT: THERMOPLASTIC,UL94V-0

1.3.CENTER CONTACT : COPPER ALLOY,Au PLATING

2.RoHS DIRECTIVE COMPLIANCE

THIRD ANGLE PROJECTION		TOLERANCES UNLESS OTHERWISE SPECIFIED		Dongguan Circon Technology Co.,Ltd.			
UNITS ■ mm □ INCH		0 PLC ± 1.00 1 PLC ± 0.50 2 PLC ± 0.25 3 PLC ± 4 PLC ±		TITLE: OS METAL CIRCULAR CONNECTOR STRAIGHT PLUGS-EASY TO SEPARATE			
ANGLES 0 PLC ± 3° 1 PLC ± 2°				C	DRAWING NO.	A-M-397	REV. A0
APPROVED BY	JACK	DATE	2023-6-12		PART NO.	OSAM4XXXX0XXA	
CHECKED BY	CHARLES	DATE	2023-6-12				
DRAWN BY	ANDY	DATE	2023-6-12	SIZE: A3	SCALE: 1:1	SHEET: 1 OF 1	

REV.	REVISION DESCRIPTION	ECR/ECN NO.	DATE