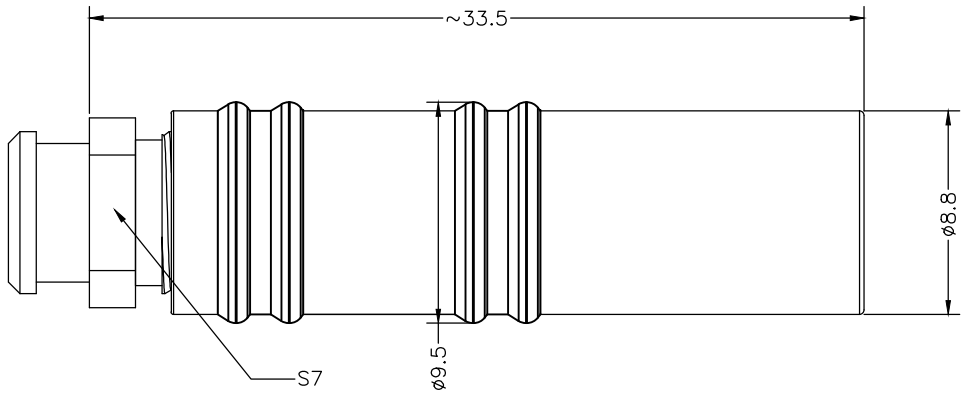

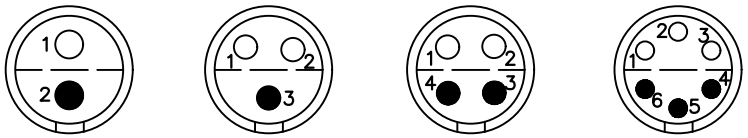

VIEW FROM TERMINATION SIDE SOCKET PART

0S MRTAL CIRCULAR ASSEMBLY P/N DESCRIPTION :

0S A S1 X X XX 0 XX B
① ② ③ ④

① Insert
P=PEEK
S=PPS

② Plating
2=High Gold
A=Gold flash

③ Number of contacts
02=2Pin
⋮
06=6Pin

④ Cable collet
22=2.2mm (Cableø>1.3~2.2mm)
32=3.2mm (Cableø>2.2~3.2mm)
37=3.7mm (Cableø>3.2~3.7mm)
44=4.4mm (Cableø>3.7~4.4mm)

NOTE:

1. MATERIAL:

1.1.SHELL ASSEMBLY: COPPER ALLOY,OUTER SHELL AND COLLET
OTHER METALLIC COMPONENTS Ni PLATING

1.2.INSERT: THERMOPLASTIC,UL94V-0

1.3.CENTER CONTACT : COPPER ALLOY,Au PLATING

2.NUMBER OF CONTACT : 2 TO 6 POSITION

3.RoHS DIRECTIVE COMPLIANCE

REV.	REVISION DESCRIPTION	ECR/ECN NO.	DATE

THIRD ANGLE PROJECTION		TOLERANCES UNLESS OTHERWISE SPECIFIED	
UNITS ■ mm □ INCH		0 PLC ± 1.00 1 PLC ± 0.50 2 PLC ± 0.25 3 PLC ± 4 PLC ±	
ANGLES 0 PLC ± 3 1 PLC ± 2			
APPROVED BY	JACK	DATE	2019-1-4
CHECKED BY	CHARLES	DATE	2019-1-4
DRAWN BY	ANDY	DATE	2019-1-4

Dongguan Circon Technology Co.,Ltd.

TITLE: 0S METAL CIRCULAR CONNECTOR
FREE SOCKET

C	DRAWING NO.	A-M-053	REV. A0
	PART NO.	0SAS1XXXX0XXB	

SIZE: A3 SCALE: 1:1 SHEET: 1 OF 1