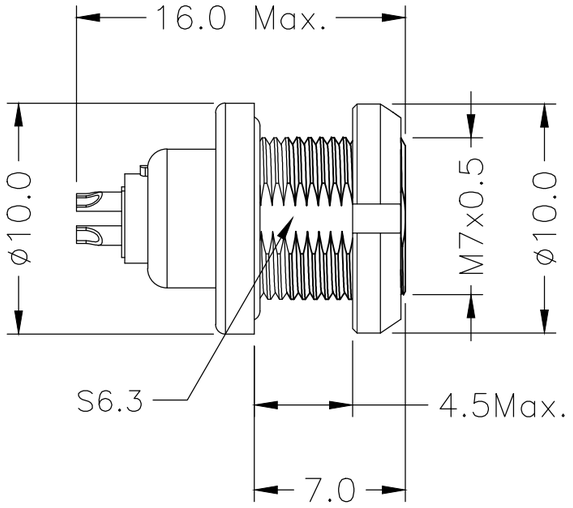


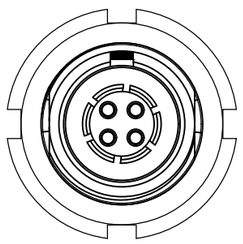

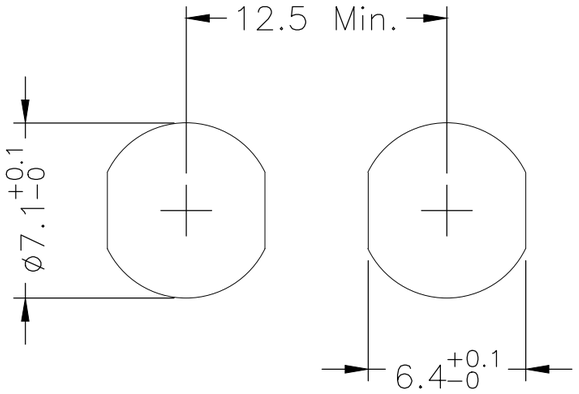


PANEL CUT−OUT

TT METAL CIRCULAR ASSEMBLY P/N DESCRIPTION :

TT A F3 X X XX X 00C
①②③ ④

① Insert
P=PEEK
1=PPS

② Plating
2=High Gold
A=Gold flash

③ Number of contacts
02=2Pin
⋮
06=6Pin

④ Keying
G= 0°
A= 30°
D= 135°
L= 80°
J= 45°

NOTE:

1. MATERIAL:

1.1.SHELL ASSEMBLY: COPPER ALLOY,OUTER SHELL AND COLLET NUT Cr PLATING, OTHER METALLIC COMPONENTS Ni PLATING

1.2.INSERT: THERMOPLASTIC,UL94V−0

1.3.CENTER CONTACT : COPPER ALLOY,Au PLATING

1.4.O−RING : ELASTOMER

2.NUMBER OF CONTACT : 2 TO 6 POSITION

3.RoHS DIRECTIVE COMPLIANCE

| REV. | REVISION DESCRIPTION | ECR/ECN NO. | DATE |
|---|---|---|---|

| | | | |
|---|---|---|---|
| THIRD ANGLE PROJECTION | | TOLERANCES UNLESS OTHERWISE SPECIFIED | |
| UNITS ■ mm □ INCH | | 0 PLC ± 1.00<br>1 PLC ± 0.50<br>2 PLC ± 0.25<br>3 PLC ±<br>4 PLC ± | |
| ANGLES 0 PLC ± 3°<br>1 PLC ± 2° | | | |
| APPROVED BY | JACK | DATE | 2022−12−13 |
| CHECKED BY | CHARLES | DATE | 2022−12−13 |
| DRAWN BY | ANDY | DATE | 2022−12−13 |

CIRCON®
Dongguan Circon Technology Co.,Ltd.

TITLE: TT METAL CIRCULAR CONNECTOR FIXED SOCKET

| | | | |
|---|---|---|---|
| C | DRAWING NO. | A−M−334 | REV. A0 |
| | PART NO. | TTAF3XXXXX00C | |
| SIZE: A3 | SCALE: 1:1 | SHEET: 1 OF 2 | |

KEYING ANGLES (RECEPTACLE FRONT VIEW):

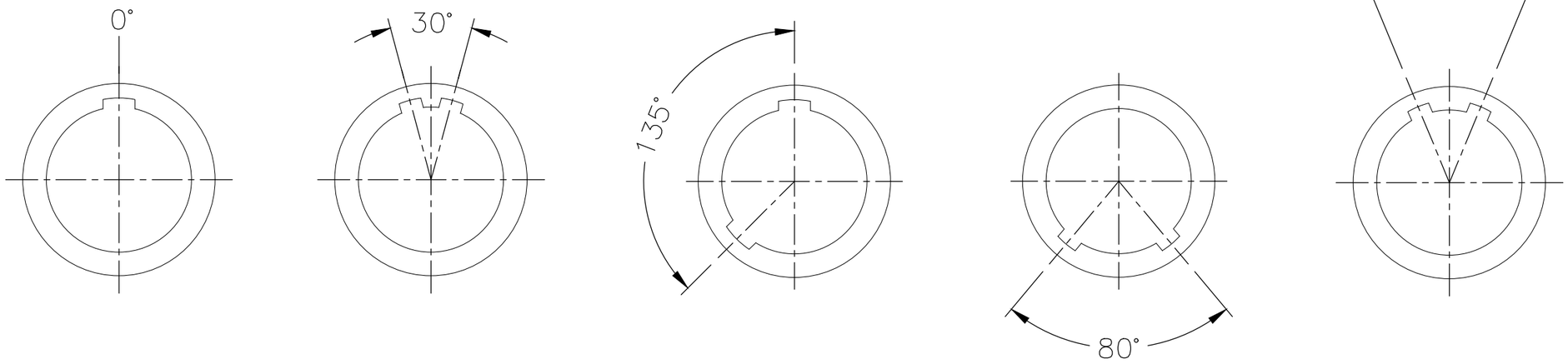


VIEW FROM TERMINATION SIDE PIN PART:

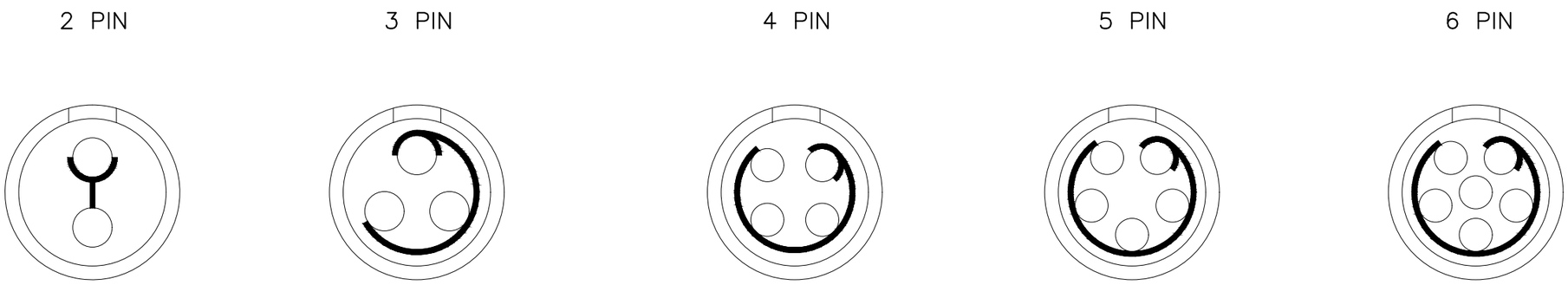


| | | | |
|---|---|---|---|
| THIRD ANGLE PROJECTION | | TOLERANCES UNLESS OTHERWISE SPECIFIED | 0 PLC ± 1.00<br>1 PLC ± 0.50<br>2 PLC ± 0.25<br>3 PLC ±<br>4 PLC ± |
| UNITS ■ mm □ INCH | | | |
| ANGLES 0 PLC ± 3°<br>1 PLC ± 2° | | | |

Dongguan Circon Technology Co.,Ltd.

TITLE: TT METAL CIRCULAR CONNECTOR FIXED SOCKET

| | | | | | |
|---|---|---|---|---|---|
| APPROVED BY | JACK | DATE | 2022-12-13 | C | DRAWING NO. A-M-334 |
| CHECKED BY | CHARLES | DATE | 2022-12-13 | | PART NO. TTAF3XXXXX00C |
| DRAWN BY | ANDY | DATE | 2022-12-13 | SIZE: A3 | SCALE: 1:1 |

REV. A0

SHEET: 2 OF 2

| REV. | REVISION DESCRIPTION | ECR/ECN NO. | DATE |
|---|---|---|---|