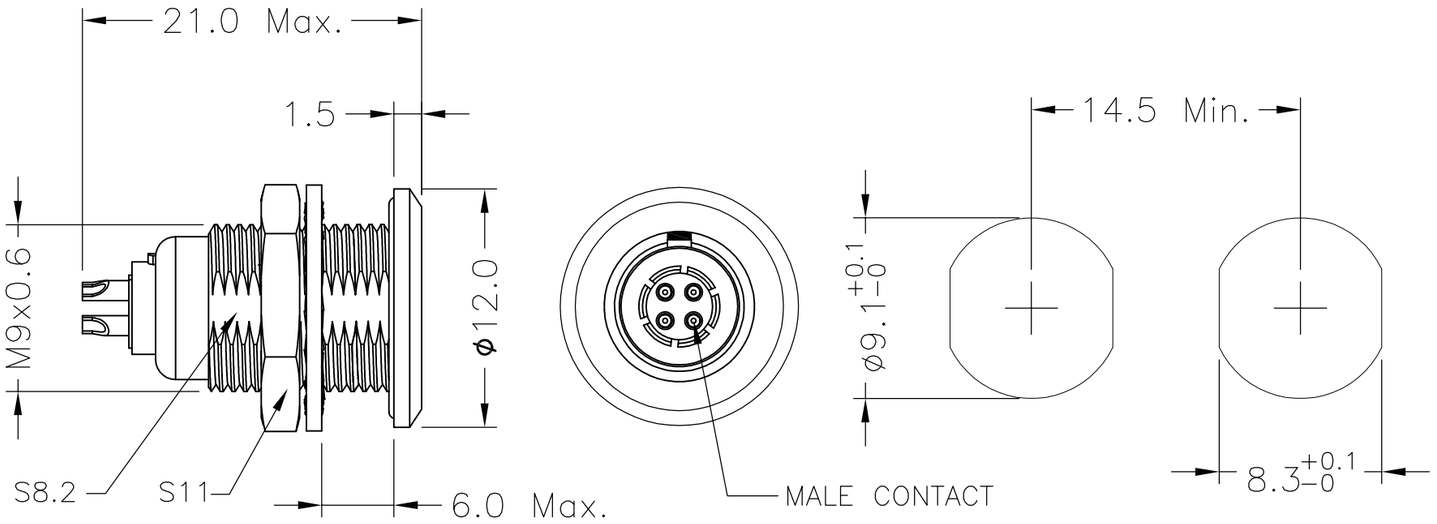

PANEL CUT−OUT

0T METAL CIRCULAR ASSEMBLY P/N DESCRIPTION :

0T A F9 X X XX X 00C
①②③ ④

① Insert
P=PEEK
1=PPS

② Plating
2=High Gold
A=Gold flash

③ Number of contacts
02=2Pin
⋮
09=9Pin

④ Keying
G= 0°
A= 30°
D= 135°
L= 80°
J= 45°

NOTE:

1. MATERIAL:

1.1.SHELL ASSEMBLY: COPPER ALLOY,OUTER SHELL Cr PLATING,
OTHER METALLIC COMPONENTS Ni PLATING

1.2.INSERT: THERMOPLASTIC,UL94V−0

1.3.CENTER CONTACT : COPPER ALLOY,Au PLATING

1.4.O−RING : ELASTOMER

2.NUMBER OF CONTACT : 2 TO 9 POSITION

3.RoHS DIRECTIVE COMPLIANCE

REV.	REVISION DESCRIPTION	ECR/ECN NO.	DATE

THIRD ANGLE PROJECTION		TOLERANCES UNLESS OTHERWISE SPECIFIED	
UNITS ■ mm □ INCH		0 PLC ± 1.00 1 PLC ± 0.50 2 PLC ± 0.25 3 PLC ± 4 PLC ±	
ANGLES 0 PLC ± 3 1 PLC ± 2			
APPROVED BY	JACK	DATE	2022−7−7
CHECKED BY	CHARLES	DATE	2022−7−7
DRAWN BY	ANDY	DATE	2022−7−7

Dongguan Circon Technology Co.,Ltd.

TITLE: 0T METAL CIRCULAR CONNECTOR
FIXED SOCKET−MALE CONTACT

C	DRAWING NO.	A−M−300	REV. A0
	PART NO.	0TAF9XXXXX00C	
SIZE: A3	SCALE: 1:1	SHEET: 1 OF 2	

KEYING ANGLES (RECEPTACLE FRONT VIEW):

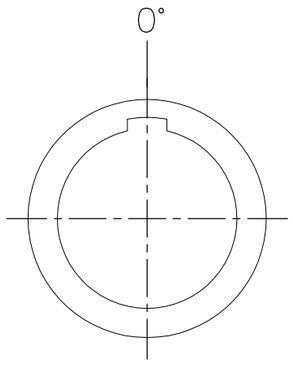

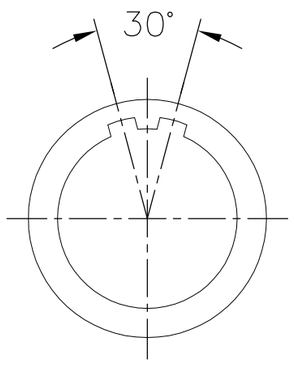

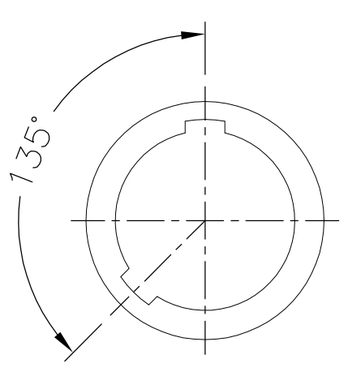

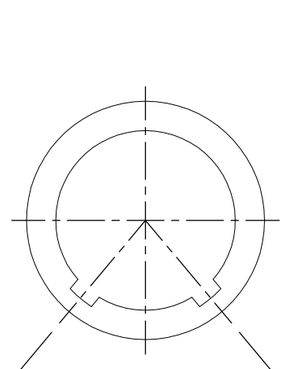

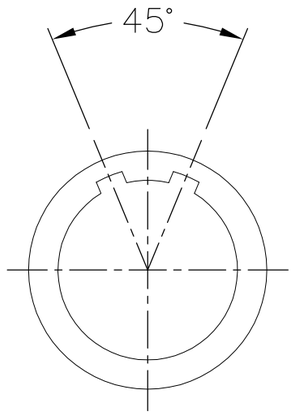

VIEW FROM TERMINATION SIDE PIN PART:

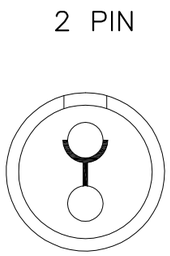

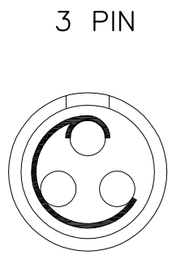

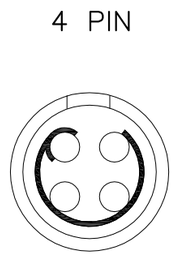

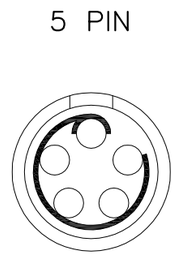

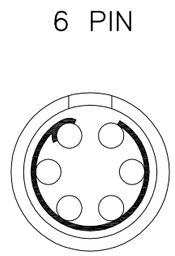

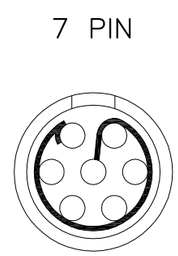

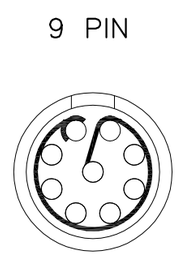

THIRD ANGLE PROJECTION		TOLERANCES UNLESS OTHERWISE SPECIFIED	
UNITS ■ mm □ INCH		0 PLC ± 1.00 1 PLC ± 0.50 2 PLC ± 0.25 3 PLC ± 4 PLC ±	
ANGLES 0 PLC ± 3 1 PLC ± 2			
APPROVED BY	JACK	DATE	2022-7-7
CHECKED BY	CHARLES	DATE	2022-7-7
DRAWN BY	ANDY	DATE	2022-7-7

Dongguan Circon Technology Co.,Ltd.

TITLE: 0T METAL CIRCULAR CONNECTOR
FIXED SOCKET-MALE CONTACT

C	DRAWING NO.	A-M-300	REV. A0
	PART NO.	0TAF9XXXXX00C	
SIZE: A3	SCALE: 1:1	SHEET: 2 OF 2	

REV.	REVISION DESCRIPTION	ECR/ECN NO.	DATE