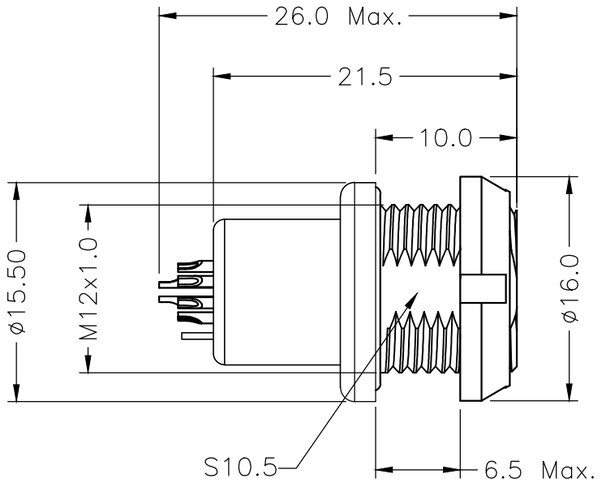

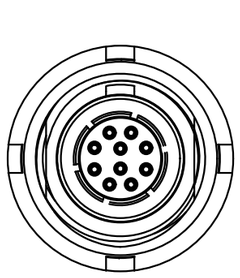

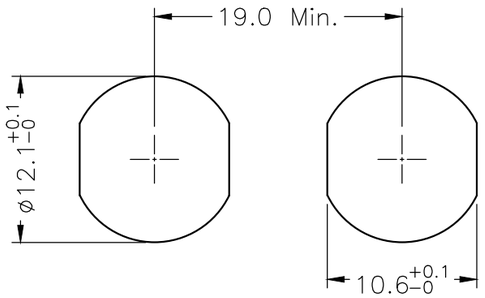

PANEL CUT–OUT

1T METAL CIRCULAR ASSEMBLY P/N DESCRIPTION :

1T A FE X X XX X 00C
①②③ ④

① Insert
P=PEEK
1=PPS

② Plating
2=High Gold
A=Gold flash

③ Number of contacts
02=2Pin
⋮
16=16Pin

④ Keying
G= 0°
A= 30°
D= 135°
J= 45°

NOTE:

1. MATERIAL:

1.1.SHELL ASSEMBLY: COPPER ALLOY,OUTER SHELL AND NUT Cr PLATING, OTHER METALLIC COMPONENTS Ni PLATING

1.2.INSERT: THERMOPLASTIC,UL94V–0

1.3.CENTER CONTACT : COPPER ALLOY,Au PLATING

1.4.O–RING : ELASTOMER

2.NUMBER OF CONTACT : 2 TO 16 POSITION

3.RoHS DIRECTIVE COMPLIANCE

REV.	REVISION DESCRIPTION	ECR/ECN NO.	DATE

THIRD ANGLE PROJECTION		TOLERANCES UNLESS OTHERWISE SPECIFIED	
UNITS ■ mm □ INCH		0 PLC ± 1.00 1 PLC ± 0.50 2 PLC ± 0.25 3 PLC ± 4 PLC ±	
ANGLES 0 PLC ± 3 1 PLC ± 2			
APPROVED BY	JACK	DATE	2025–8–27
CHECKED BY	CHARLES	DATE	2025–8–27
DRAWN BY	ANDY	DATE	2025–8–27

Dongguan Circon Technology Co.,Ltd.

TITLE: 1T METAL CIRCULAR CONNECTOR FIXED SOCKET/VACUUMTIGHT

C	DRAWING NO.	A–M–707	REV. A0
	PART NO.	1TAFEXXXXX00C	
SIZE: A3	SCALE: 1:1	SHEET: 1 OF 2	

KEYING ANGLES (RECEPTACLE FRONT VIEW):

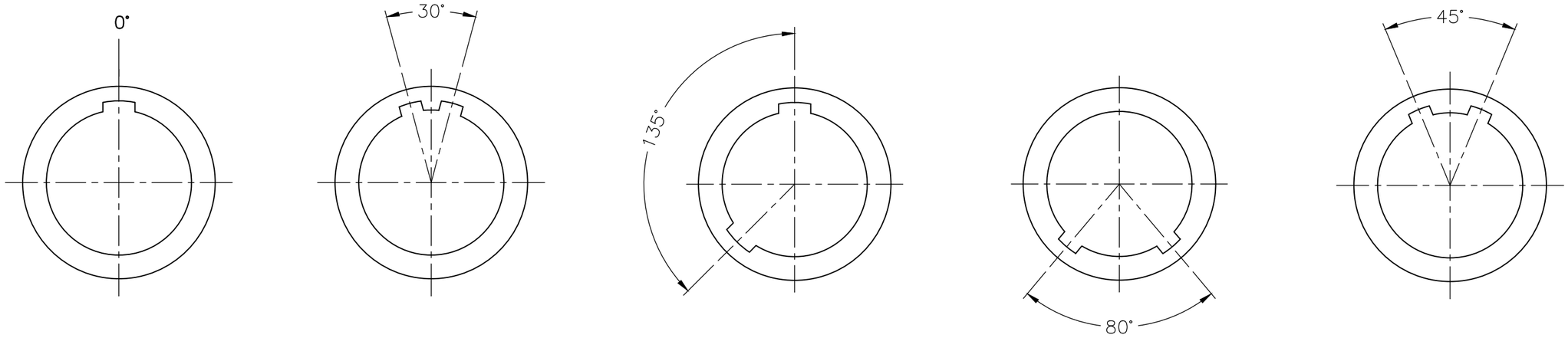

VIEW FROM TERMINATION SIDE PIN PART

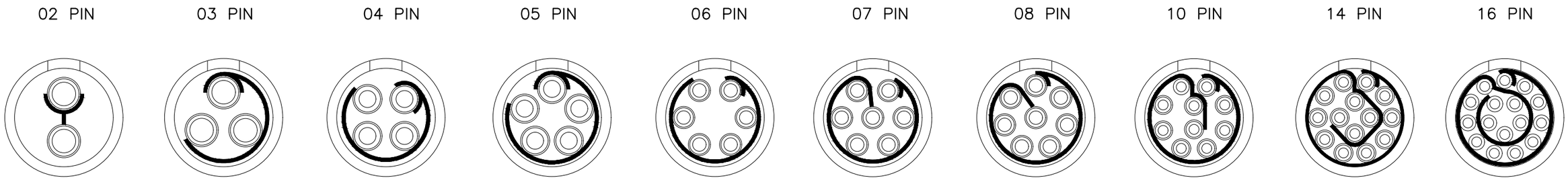

THIRD ANGLE PROJECTION	TOLERANCES UNLESS OTHERWISE SPECIFIED
UNITS ■ mm □ INCH	0 PLC ± 1.00 1 PLC ± 0.50 2 PLC ± 0.25 3 PLC ± 4 PLC ±
ANGLES 0 PLC ± 3 1 PLC ± 2	

Dongguan Circon Technology Co.,Ltd.

TITLE: 1T METAL CIRCULAR CONNECTOR FIXED SOCKET/VACUUMTIGHT

APPROVED BY	JACK	DATE	2025-8-27	C	DRAWING NO. A-M-707 REV. A0
CHECKED BY	CHARLES	DATE	2025-8-27		PART NO. 1TAFEXXXXX00C
DRAWN BY	ANDY	DATE	2025-8-27	SIZE: A3	SCALE: 1:1 SHEET: 2 OF 2

REV.	REVISION DESCRIPTION	ECR/ECN NO.	DATE