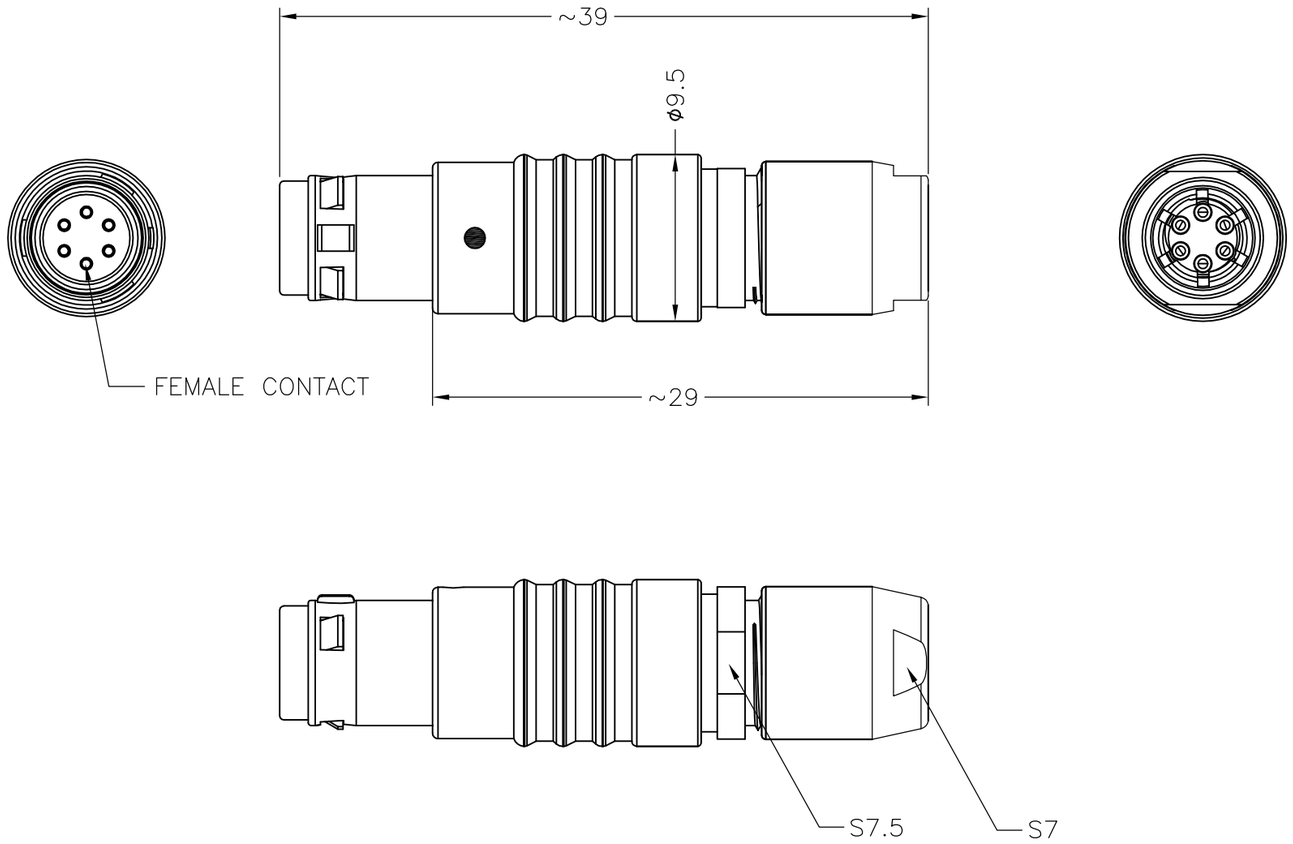

0T METAL CIRCULAR ASSEMBLY P/N DESCRIPTION :

0T A M2 X X XX X XX A
① ② ③ ④ ⑤

① Insert
P=PEEK
1=PPS

② Plating
2=High Gold
A=Gold flash

③ Number of contacts
02=2Pin
⋮
09=9Pin

④ Keying
G= 0°
A= 30°
D=135°
L= 80°
J= 45°

⑤ Cable collet
10=1.0mm (Cableø1.0~1.2mm)
15=1.5mm (Cableø1.3~1.5mm)
20=2.0mm (Cableø1.6~2.0mm)
25=2.5mm (Cableø2.1~2.5mm)
30=3.0mm (Cableø2.6~3.0mm)
35=3.5mm (Cableø3.1~3.5mm)
40=4.0mm (Cableø3.6~4.0mm)
45=4.5mm (Cableø4.1~4.5mm)
50=5.0mm (Cableø4.6~5.0mm)

NOTE:

1. MATERIAL:

1.1.SHELL ASSEMBLY: COPPER ALLOY,OUTER SHELL AND COLLET NUT Cr PLATING, OTHER METALLIC COMPONENTS Ni PLATING

1.2.INSERT: THERMOPLASTIC,UL94V-0

1.3.CENTER CONTACT : COPPER ALLOY,Au PLATING

1.4.GASKET : ELASTOMER

2.NUMBER OF CONTACT : 2 TO 9 POSITION

3.RoHS DIRECTIVE COMPLIANCE

THIRD ANGLE PROJECTION		TOLERANCES UNLESS OTHERWISE SPECIFIED	Dongguan Circon Technology Co.,Ltd.
UNITS ■ mm □ INCH		0 PLC ± 1.00 1 PLC ± 0.50 2 PLC ± 0.25 3 PLC ± 4 PLC ±	TITLE: 0T METAL CIRCULAR CONNECTOR STRAIGHT PLUGS-FEMALE CONTACT
ANGLES 0 PLC ± 3 1 PLC ± 2			C / DRAWING NO. A-M-301 / REV. A0 / PART NO. 0TAM2XXXXXXXA
APPROVED BY	JACK	DATE 2022-7-7	
CHECKED BY	CHARLES	DATE 2022-7-7	
DRAWN BY	ANDY	DATE 2022-7-7	SIZE: A3 / SCALE: 1:1 / SHEET: 1 OF 2

REV.	REVISION DESCRIPTION	ECR/ECN NO.	DATE

KEYING (PLUG FRONT VIEW)

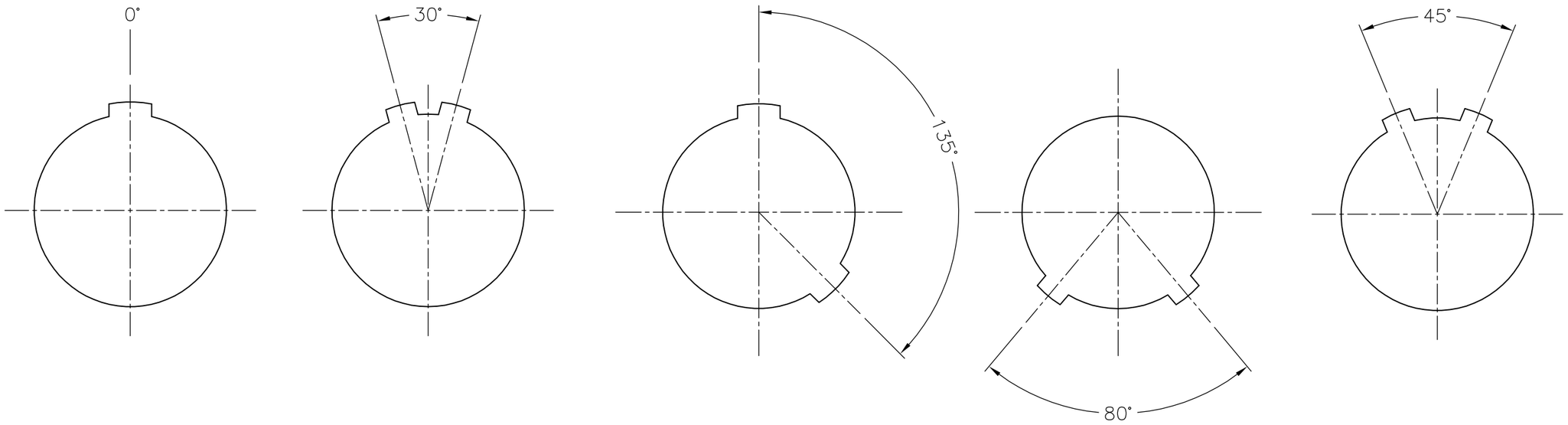

VIEW FROM TERMINATION SIDE PIN PART

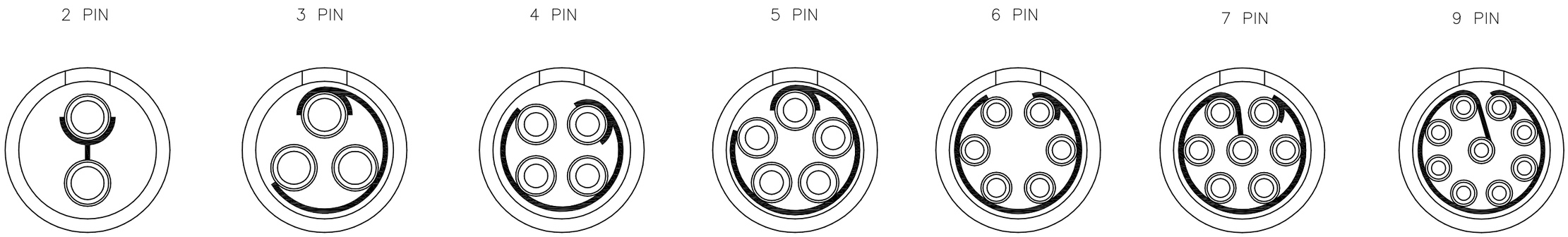

REV.	REVISION DESCRIPTION	ECR/ECN NO.	DATE

THIRD ANGLE PROJECTION		TOLERANCES UNLESS OTHERWISE SPECIFIED	
UNITS ■ mm □ INCH		0 PLC ± 1.00 1 PLC ± 0.50 2 PLC ± 0.25 3 PLC ± 4 PLC ±	
ANGLES 0 PLC ± 3 1 PLC ± 2			
APPROVED BY	JACK	DATE	2022-7-7
CHECKED BY	CHARLES	DATE	2022-7-7
DRAWN BY	ANDY	DATE	2022-7-7

Dongguan Circon Technology Co.,Ltd.

TITLE: 0T METAL CIRCULAR CONNECTOR
STRAIGHT PLUGS–FEMALE CONTACT

C	DRAWING NO.	A–M–301	REV. A0
	PART NO.	0TAM2XXXXXXXA	
SIZE: A3	SCALE: 1:1	SHEET: 2 OF 2	