1P CIRCULAR ASSEMBLY P/N DESCRIPTION :

1P X F9 X X XX X 0 D X X
① ② ③④ ⑤ ⑥⑦

2 PIN	3 PIN	4 PIN	5 PIN	6 PIN	7 PIN	8 PIN	9 PIN	10 PIN	14 PIN
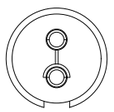		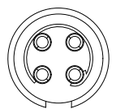			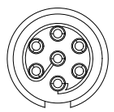		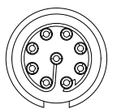	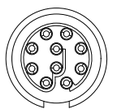	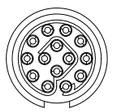

① Type
- A=Shell:PSU Grey
- B=Shell:PSU Black
- C=Shell:PEI Grey
- D=Shell:PEI Black
- E=Shell:PPSU Grey
- F=Shell:PPSU Black
- 1=Shell:ABS Grey
- 2=Shell:ABS Black

② Insert
- P=PEEK
- S=PPS

③ Plating
- 2=High Gold
- A=Gold flash

④ Number of contacts
- 02=2Pin
- ⋮
- 14=14Pin

⑤ Keying
- G= 0° (2–14Pin)
- A= 40° (2–14Pin)
- B= 60° (2–14Pin)
- C= 80° (2–14Pin)
- H= 170° (8,10&14Pin)
- J= 205° (8,10&14Pin)

⑥ Nut Colour
- 0= Black
- 1= White
- 2= Red
- 4= Yellow
- 5= Green
- 6= Blue
- 8= Grey

⑦ Logo
- 0= No Logo
- 1= With Logo
- A= No Logo&With Ink mark
- B= With Logo&With Ink mark

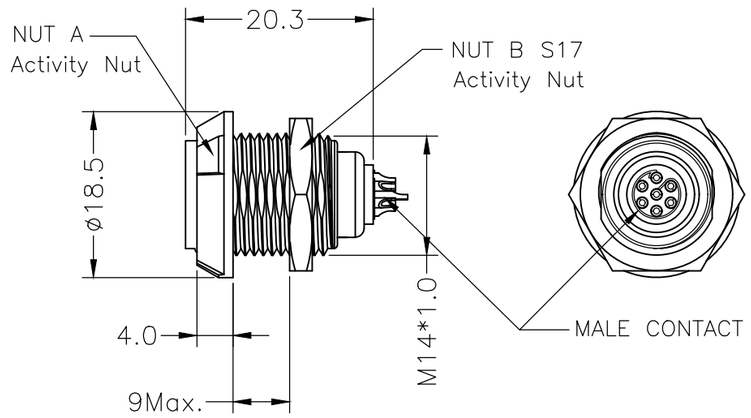

NOTE:
1. MATERIAL:
1.1.SHELL: THERMOPLASTIC,UL94V–0
1.2.INSERT: THERMOPLASTIC,UL94V–0
1.3.CENTER CONTACT : COPPER ALLOY, Au PLATING
1.4.NUT A : THERMOPLASTIC,UL94V–0
1.5.NUT B : COPPER ALLOY,Ni PLATING
2.NUMBER OF CONTACT : 2 TO 14 POSITION
3.RoHS DIRECTIVE COMPLIANCE

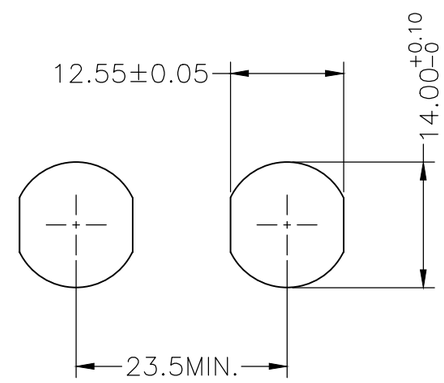

PANEL HOLE

THIRD ANGLE PROJECTION		TOLERANCES UNLESS OTHERWISE SPECIFIED	
UNITS ■ mm □ INCH		0 PLC ± 1.00 1 PLC ± 0.50 2 PLC ± 0.25 3 PLC ± 4 PLC ±	
ANGLES 0 PLC ± 3 1 PLC ± 2			
APPROVED BY	JACK	DATE	2019–6–18
CHECKED BY	CHARLES	DATE	2019–6–18
DRAWN BY	ANDY	DATE	2019–6–18

Dongguan Circon Technology Co.,Ltd.

TITLE: 1P CIRCULAR CONNECTOR
FIXED SOCKETS–MALE CONTACT

C	DRAWING NO.	A–M–123	REV. A0
	PART NO.	1PXF9XXXXX0DXX	

REV.	REVISION DESCRIPTION	ECR/ECN NO.	DATE

SIZE: A3 SCALE: 1:1 SHEET: 1 OF 2

KEYING (RECEPTACLE FRONT VIEW):

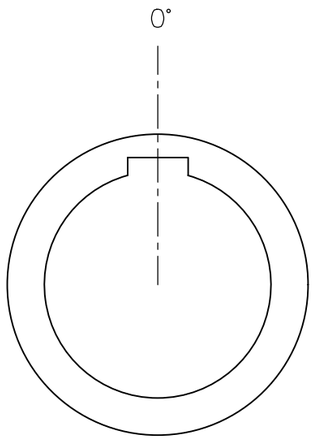

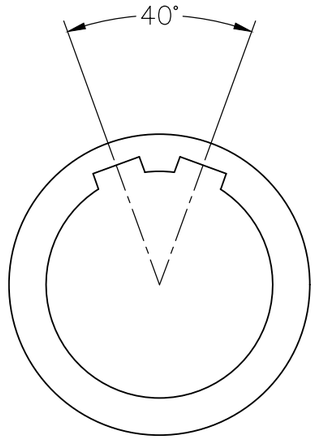

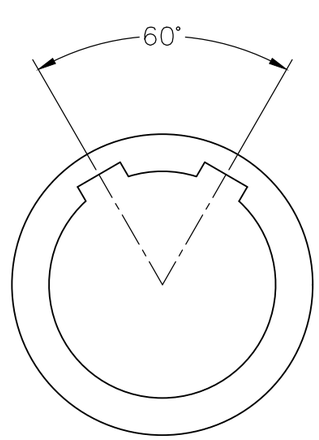

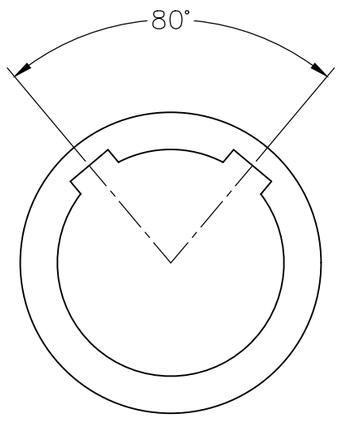

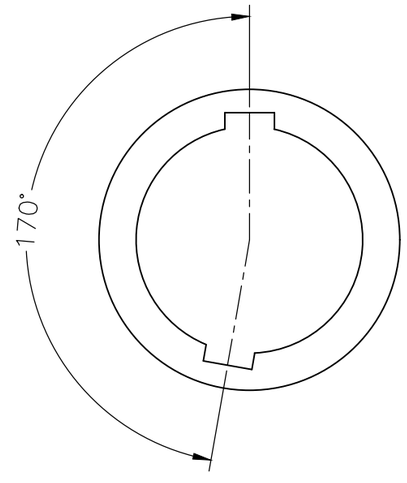

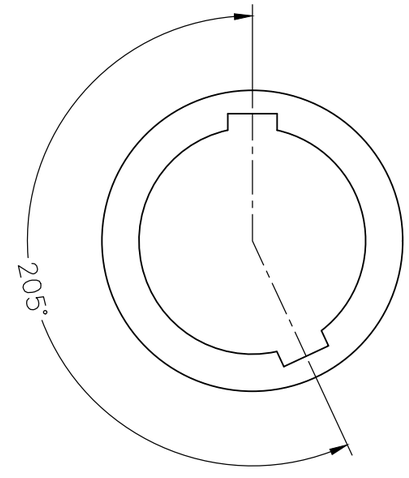

THIRD ANGLE PROJECTION		TOLERANCES UNLESS OTHERWISE SPECIFIED	
UNITS ■ mm □ INCH		0 PLC ± 1.00 1 PLC ± 0.50 2 PLC ± 0.25 3 PLC ± 4 PLC ±	
ANGLES 0 PLC ± 3 1 PLC ± 2			
APPROVED BY	JACK	DATE	2019-6-18
CHECKED BY	CHARLES	DATE	2019-6-18
DRAWN BY	ANDY	DATE	2019-6-18

Dongguan Circon Technology Co.,Ltd.

TITLE: 1P CIRCULAR CONNECTOR
FIXED SOCKETS–MALE CONTACT

C	DRAWING NO.	A–M–123	REV. A0
	PART NO.	1PXF9XXXXX0DXX	
SIZE: A3	SCALE: 1:1	SHEET: 2 OF 2	

REV.	REVISION DESCRIPTION	ECR/ECN NO.	DATE