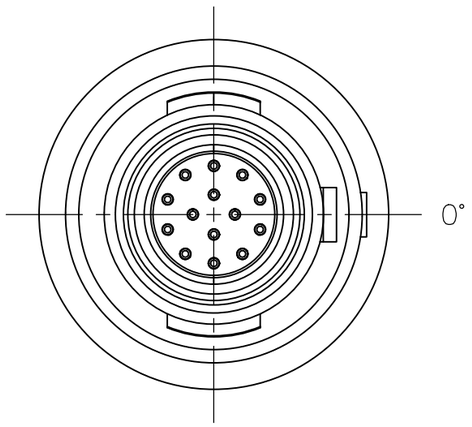

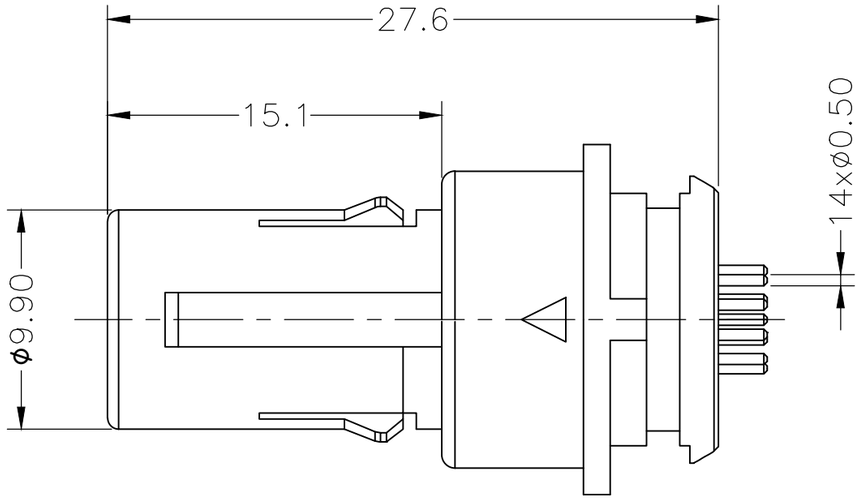

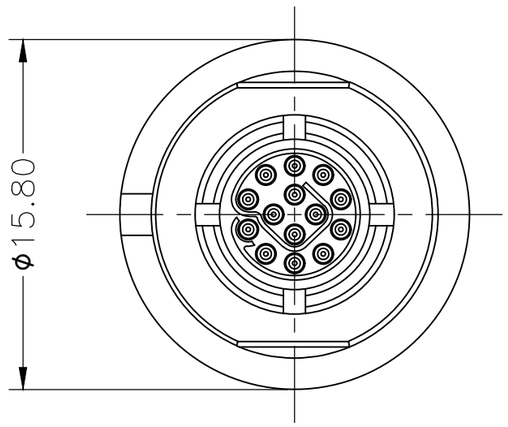

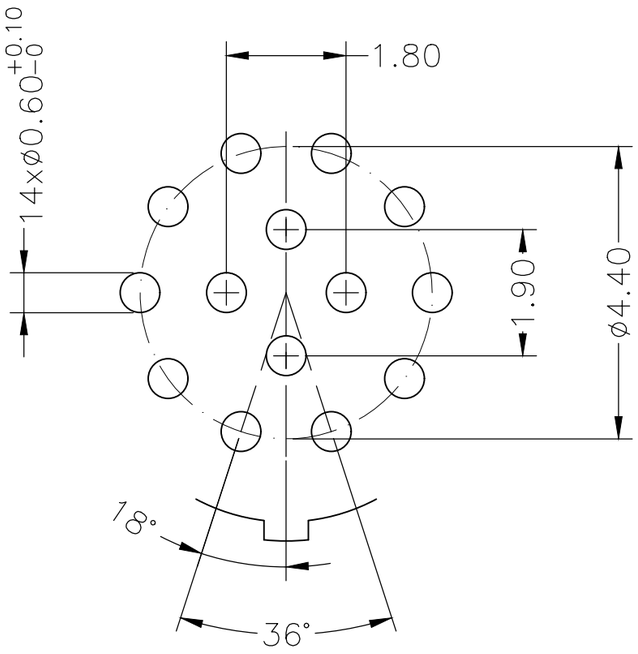

PCB LAYOUT:

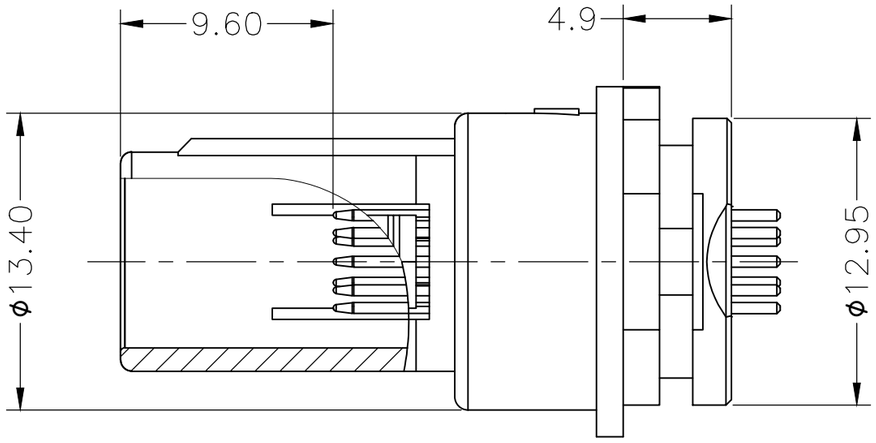

NOTE:

1. MATERIAL:

1.1.SHELL: THERMOPLASTIC,PSU GREY,UL94V-0

1.2.CENTER CONTACT : COPPER ALLOY,Au PLATING

2.NUMBER OF CONTACT : 14 POSITION

3.ELECTRICAL REQUIREMENTS

3.1.INSULATION RESISTANCE-PIN TO PIN-1000Gohm, MIN

3.2.DIELECTRIC WITHSTAND-PIN TO PIN-600VDC

4.RoHS DIRECTIVE COMPLIANCE

REV.	REVISION DESCRIPTION	ECR/ECN NO.	DATE	DRAWN BY	ANDY	DATE	2024-6-11

THIRD ANGLE PROJECTION

UNITS ■ mm □ INCH

ANGLES 0 PLC ± 3, 1 PLC ± 2

TOLERANCES UNLESS OTHERWISE SPECIFIED

0 PLC ± 1.00
1 PLC ± 0.50
2 PLC ± 0.25
3 PLC ±
4 PLC ±

APPROVED BY	JACK	DATE	2024-6-11
CHECKED BY	CHARLES	DATE	2024-6-11

Dongguan Circon Technology Co.,Ltd.

TITLE: 1P CIRCULAR CONNECTOR DISPOSABLE PLUGS 14PIN

C	DRAWING NO.	A-M-524	REV. A0
	PART NO.	1PAMB0A14G00A0	

SIZE: A3 | SCALE: 1:1 | SHEET: 1 OF 1