2P CIRCULAR ASSEMBLY P/N DESCRIPTION :

2P X F6 X X XX X 0 D X X
① ② ③④ ⑤ ⑥⑦

① Shell:
A=Shell:PSU Grey
B=Shell:PSU Black
C=Shell:PEI Grey
D=Shell:PEI Black
E=Shell:PPSU Grey
F=Shell:PPSU Black
1=Shell:ABS Grey
2=Shell:ABS Black

② Insert
P=PEEK–With Ink mark
S=PPS–With Ink mark
T=PPS–Unmarked
U=PEEK–Unmarked

③ Contact Plating
2=High Gold
A=Gold flash
N=Nickel

④ Number of contacts
02=2Pin
⋮
34=34Pin

⑤ Keying
B=0°+60° H=0°+80°
C=0°+100° J=0°+90°
D=0°+110°

⑥ Nut Colour
0= Black 2= Red 5= Green 8= Grey
1= White 4= Yellow 6= Blue

⑦ Logo&Nut A mark
0= No Logo A= No Logo&With Ink mark
1= With Logo B= With Logo&With Ink mark

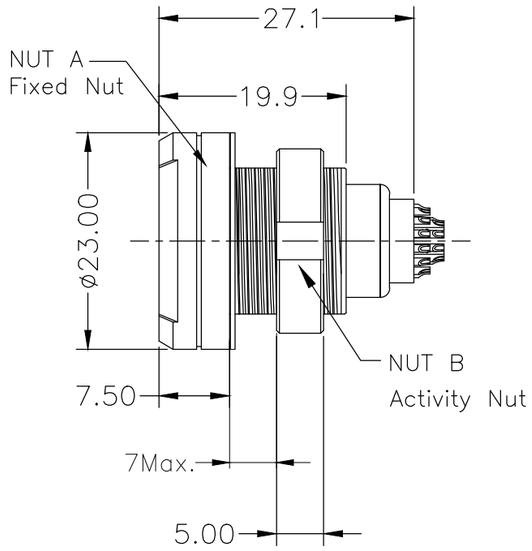

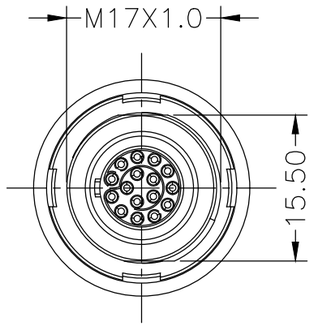

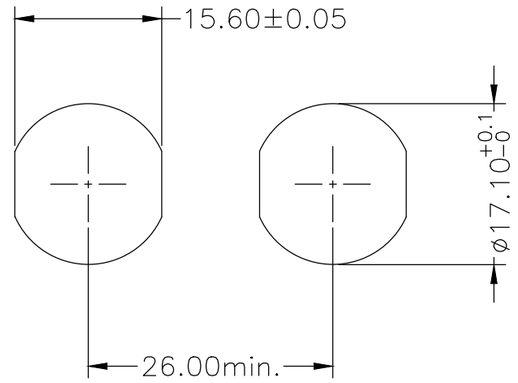

PANEL HOLE

NOTE:

1. MATERIAL:

1.1.SHELL: THERMOPLASTIC,UL94V–0

1.2.INSERT: THERMOPLASTIC,UL94V–0

1.3.CENTER CONTACT : COPPER ALLOY, Au PLATING

1.4.NUT A : THERMOPLASTIC,UL94V–0

1.5.NUT B : THERMOPLASTIC,UL94V–0

1.6.GASKET : ELASTOMER

2.NUMBER OF CONTACT : 2 TO 34 POSITION

3.RoHS DIRECTIVE COMPLIANCE

REV.	REVISION DESCRIPTION	ECR/ECN NO.	DATE

THIRD ANGLE PROJECTION		TOLERANCES UNLESS OTHERWISE SPECIFIED	
UNITS ■ mm □ INCH		0 PLC ± 1.00 1 PLC ± 0.50 2 PLC ± 0.25 3 PLC ± 4 PLC ±	
ANGLES 0 PLC ± 3 1 PLC ± 2			
APPROVED BY	JACK	DATE	2024–10–10
CHECKED BY	CHARLES	DATE	2024–10–10
DRAWN BY	ANDY	DATE	2024–10–10

CIRCON®
Dongguan Circon Technology Co.,Ltd.

TITLE: 2P CIRCULAR CONNECTOR
FIXED SOCKETS/IP64

C	DRAWING NO.	A–M–576	REV. A0
	PART NO.	2PXF6XXXXX0DXX	

SIZE: A3 SCALE: 1:1 SHEET: 1 OF 2

VIEW FROM TERMINATION SIDE PIN PART

2 POS.

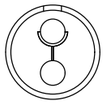

3 POS.



4 POS.



5 POS.



6 POS.



7 POS.



8 POS.



10 POS.



12 POS.



16 POS.



19 POS.



26 POS.



32 POS.



34 POS.

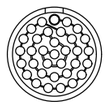

KEYING ANGLES (RECEPTACLE FRONT VIEW):

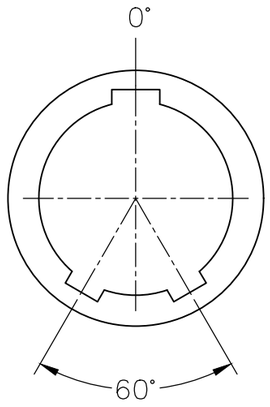

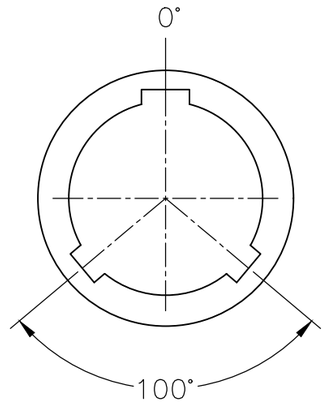

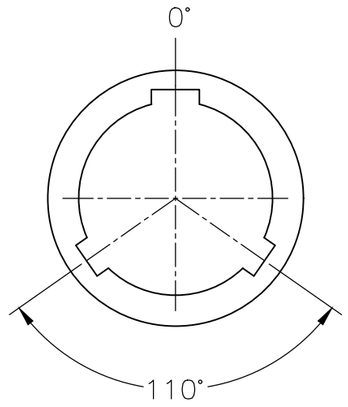

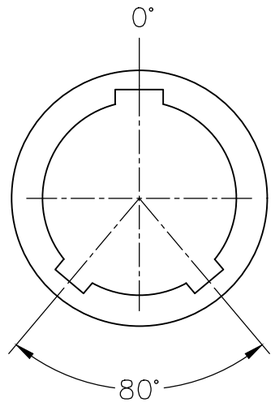

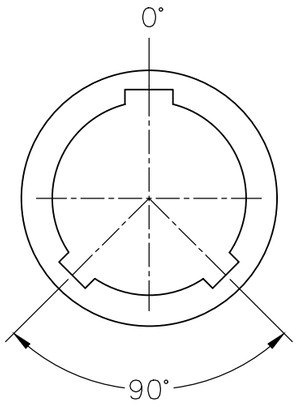

REV.	REVISION DESCRIPTION	ECR/ECN NO.	DATE

THIRD ANGLE PROJECTION

UNITS ■ mm □ INCH

ANGLES 0 PLC ± 3
1 PLC ± 2

TOLERANCES UNLESS OTHERWISE SPECIFIED

0 PLC ± 1.00
1 PLC ± 0.50
2 PLC ± 0.25
3 PLC ±
4 PLC ±

APPROVED BY	JACK	DATE	2024-10-10
CHECKED BY	CHARLES	DATE	2024-10-10
DRAWN BY	ANDY	DATE	2024-10-10

CIRCON®

Dongguan Circon Technology Co.,Ltd.

TITLE: 2P CIRCULAR CONNECTOR
FIXED SOCKETS/IP64

C	DRAWING NO.	A-M-576	REV. A0
	PART NO.	2PXF6XXXXX0DXX	

SIZE: A3 | SCALE: 1:1 | SHEET: 2 OF 2