2P CIRCULAR ASSEMBLY P/N DESCRIPTION :

2P X F8 X X XX X 0 D X X
① ② ③④ ⑤ ⑥⑦

① Type
A=Shell:PSU Grey
B=Shell:PSU Black
C=Shell:PEI Grey
D=Shell:PEI Black
E=Shell:PPSU Grey
F=Shell:PPSU Black
1=Shell:ABS Grey
2=Shell:ABS Black

② Insert
P=PEEK
S=PPS

③ Plating
2=High Gold
A=Gold flash

④ Number of contacts
A6=6Pin Signal contact+1Pin Fluid contact

⑤ Keying
B=0°+60° H= 0°+80°
C=0°+100° J= 0°+90°
D=0°+110°

⑥ Nut Colour
0= Black 2= Red 5= Green 8= Grey
1= White 4= Yellow 6= Blue

⑦ Logo
0= No Logo A= No Logo&With Ink mark
1= With Logo B= With Logo&With Ink mark

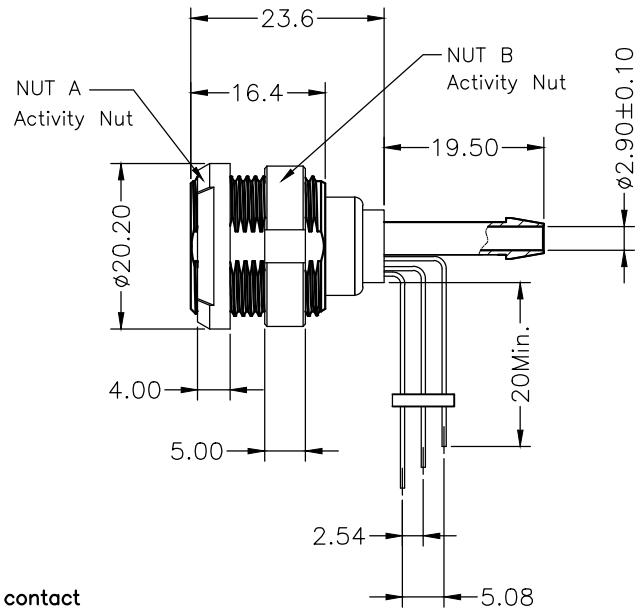

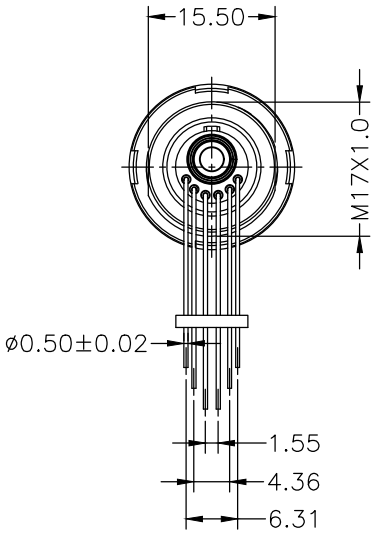

NOTE:
1. MATERIAL:
1.1.SHELL: THERMOPLASTIC,UL94V-0
1.2.INSERT: THERMOPLASTIC,UL94V-0
1.3.SIGNAL CONTACT : COPPER ALLOY, Au PLATING
1.4.FLUID CONTACT : COPPER ALLOY,Ni PLATING
1.5.NUT A : THERMOPLASTIC,UL94V-0
1.6.NUT B : THERMOPLASTIC,UL94V-0
2.FLUID CONTACT CHARACTERISTICS
2.1.MAX WORKING PRESSURE : 2 bars
2.2.TUBE DIAMETER INNER/OUTER : 4mm/6mm
3.RoHS DIRECTIVE COMPLIANCE

THIRD ANGLE PROJECTION		TOLERANCES UNLESS OTHERWISE SPECIFIED		Dongguan Circon Technology Co.,Ltd.	
UNITS ■ mm □ INCH		0 PLC ± 1.00 1 PLC ± 0.50 2 PLC ± 0.25 3 PLC ± 4 PLC ±		TITLE: 2P CIRCULAR CONNECTOR FIXED 90° SOCKETS WITH FLUID CONTACT	
ANGLES 0 PLC ± 3 1 PLC ± 2				C	DRAWING NO. A-M-122 / PART NO. 2PXF8XXXXX0DXX / REV. A0
APPROVED BY	JACK	DATE	2020-3-14		
CHECKED BY	CHARLES	DATE	2020-3-14		
DRAWN BY	ANDY	DATE	2020-3-14	SIZE: A3	SCALE: 1:1 / SHEET: 1 OF 2

REV.	REVISION DESCRIPTION	ECR/ECN NO.	DATE

PCB DRILLING PATTEN: (TOLERANCES:±0.05)

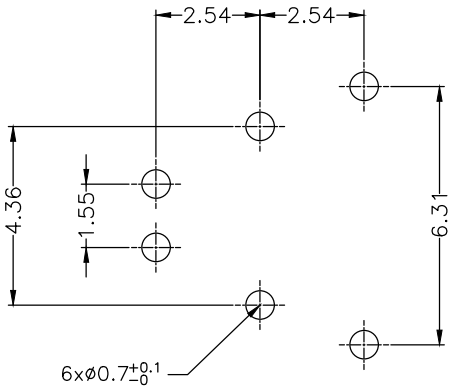

PANEL HOLE

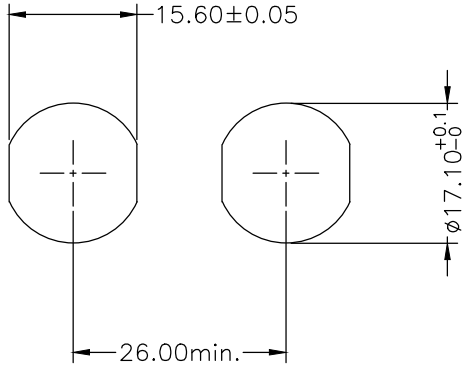

KEYING ANGLES (RECEPTACLE FRONT VIEW):

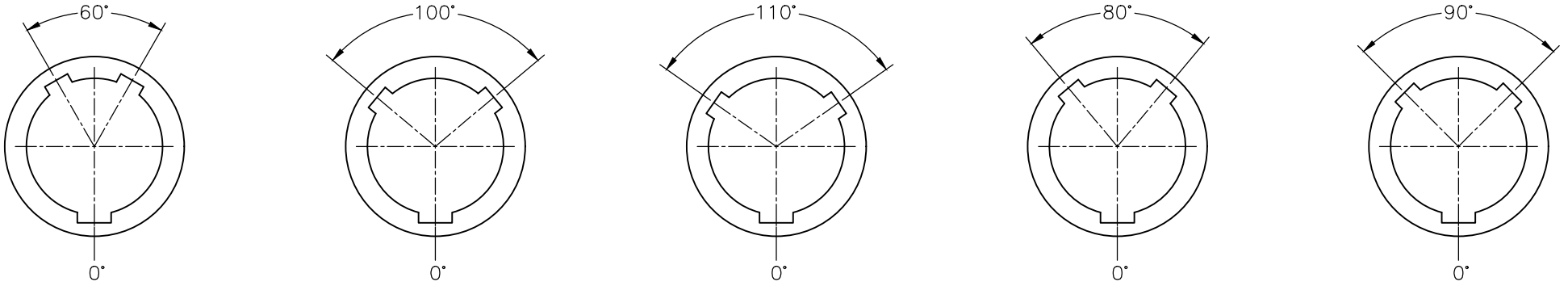

THIRD ANGLE PROJECTION		TOLERANCES UNLESS OTHERWISE SPECIFIED	
UNITS ■ mm □ INCH		0 PLC ± 1.00 1 PLC ± 0.50 2 PLC ± 0.25 3 PLC ± 4 PLC ±	
ANGLES 0 PLC ± 3 1 PLC ± 2			
APPROVED BY	JACK	DATE	2020-3-14
CHECKED BY	CHARLES	DATE	2020-3-14
DRAWN BY	ANDY	DATE	2020-3-14

Dongguan Circon Technology Co.,Ltd.

TITLE: 2P CIRCULAR CONNECTOR
FIXED 90° SOCKETS WITH FLUID CONTACT

C	DRAWING NO.	A-M-122	REV. A0
	PART NO.	2PXF8XXXXX0DXX	

SIZE: A3 | SCALE: 1:1 | SHEET: 2 OF 2

REV.	REVISION DESCRIPTION	ECR/ECN NO.	DATE