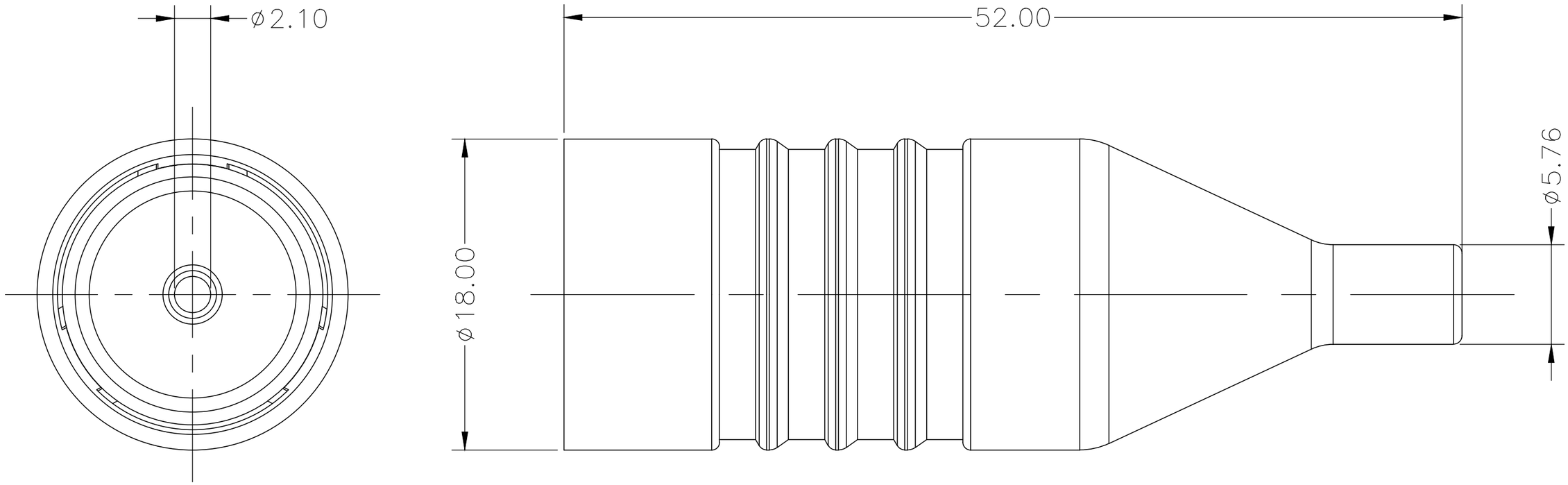

NOTE:

1.MATERIAL: THERMOPLASTIC,UL94V-0

2.RoHS DIRECTIVE COMPLIANCE

3.P/N DESCRIPTION : AM677 X 0000000
①

① Shell

A=PSU Grey

B=PSU Black

THIRD ANGLE PROJECTION		TOLERANCES UNLESS OTHERWISE SPECIFIED		Dongguan Circon Technology Co.,Ltd.			
UNITS ■ mm □ INCH		0 PLC ± 0.50 1 PLC ± 0.20 2 PLC ± 0.10 3 PLC ± 0.05 4 PLC ±		TITLE: 2P CIRCULAR CONNECTOR DISPOSABLE FIXED-PROTECTIVE BACKSHELL			
ANGLES 0 PLC ± 3 1 PLC ± 2							
APPROVED BY	JACK	DATE	2025-6-30	C	DRAWING NO.	A-M-677	REV. A0
CHECKED BY	CHARLES	DATE	2025-6-30		PART NO.	AM677X0000000	
DRAWN BY	ANDY	DATE	2025-6-30	SIZE: A3	SCALE: 1:1	SHEET: 1 OF 1	

REV.	REVISION DESCRIPTION	ECR/ECN NO.	DATE