2P CIRCULAR ASSEMBLY P/N DESCRIPTION :

2P H FH X X XX X 0 D X X
① ② ③ ④ ⑤ ⑥ ⑦

① Shell

H=Shell:Copper alloy,Cr Plating

② Insert

P=PEEK—With Ink mark
S=PPS—With Ink mark
T=PPS—Unmarked
U=PEEK—Unmarked

③ Contact Plating

2=High Gold
A=Gold flash
N=Nickel

④ Number of contacts

02=2Pin
⋮
34=34Pin
8A=8Pin—Special model

⑤ Keying

B=0°+60° H= 0°+80°
C=0°+100° J= 0°+90°
D=0°+110°

⑥ Nut Colour

A= Silvery white

⑦ Logo

0= No Logo A= No Logo&With Ink mark
1= With Logo B= With Logo&With Ink mark

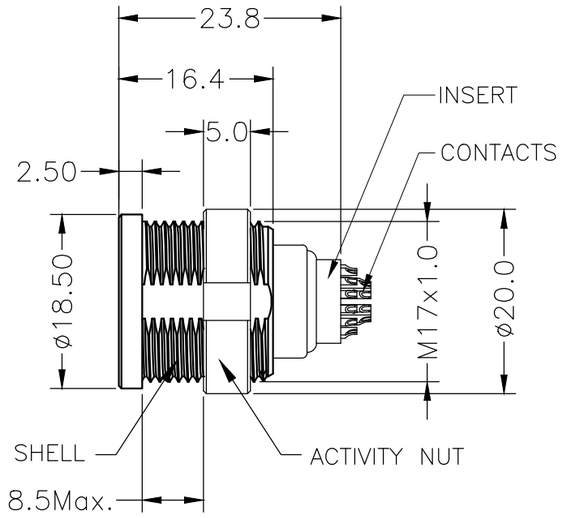

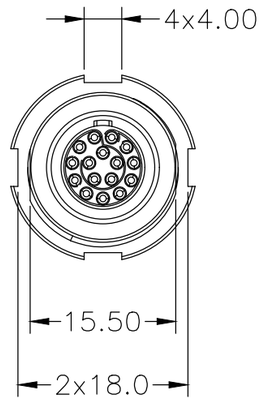

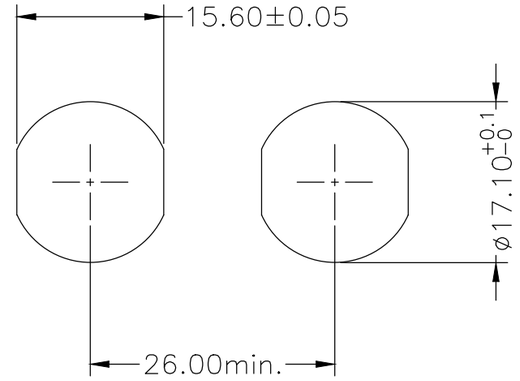

PANEL HOLE

NOTE:

1. MATERIAL:

1.1.SHELL: COPPER ALLOY,Cr PLATING

1.2.INSERT: THERMOPLASTIC,UL94V—0

1.3.CENTER CONTACT : COPPER ALLOY, Au PLATING

1.4.ACTIVITY NUT : COPPER ALLOY,Cr PLATING

2.NUMBER OF CONTACT : 2 TO 34 POSITION

3.RoHS DIRECTIVE COMPLIANCE

THIRD ANGLE PROJECTION		TOLERANCES UNLESS OTHERWISE SPECIFIED	
UNITS ■ mm □ INCH		0 PLC ± 1.00 1 PLC ± 0.50 2 PLC ± 0.25 3 PLC ± 4 PLC ±	Dongguan Circon Technology Co.,Ltd.
ANGLES 0 PLC ± 3 1 PLC ± 2			TITLE: 2P CIRCULAR CONNECTOR FIXED SOCKETS—METAL SHELL
APPROVED BY	JACK	DATE 2026—10—15	C / DRAWING NO. A—M—516 / REV. A3
CHECKED BY	CHARLES	DATE 2026—10—15	PART NO. 2PHFHXXXXX0DXX
DRAWN BY	ANDY	DATE 2026—10—15	SIZE: A3 SCALE: 1:1 SHEET: 1 OF 2

REV.	REVISION DESCRIPTION	ECR/ECN NO.	DATE

VIEW FROM TERMINATION SIDE PIN PART

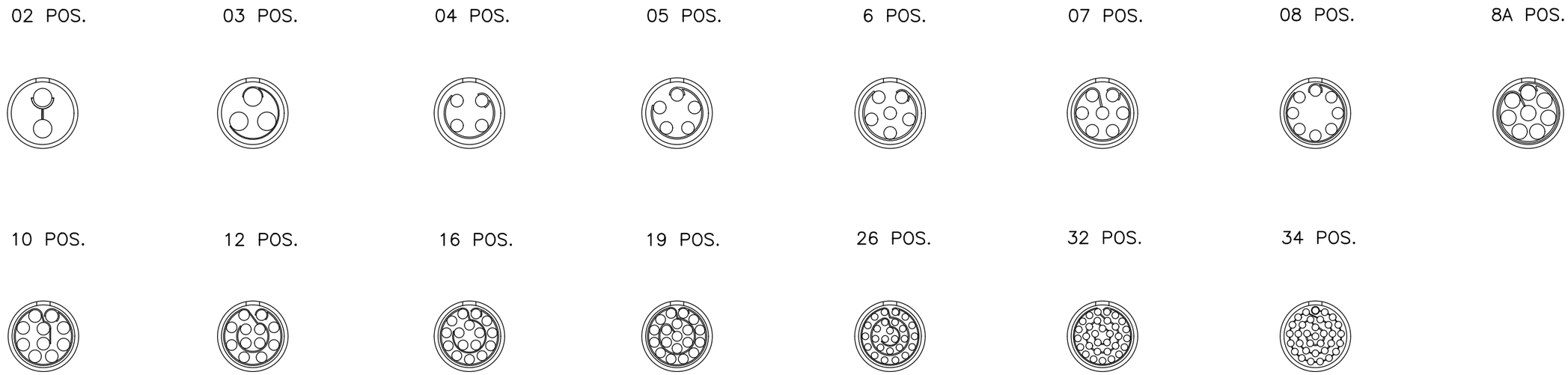

KEYING ANGLES (RECEPTACLE FRONT VIEW):

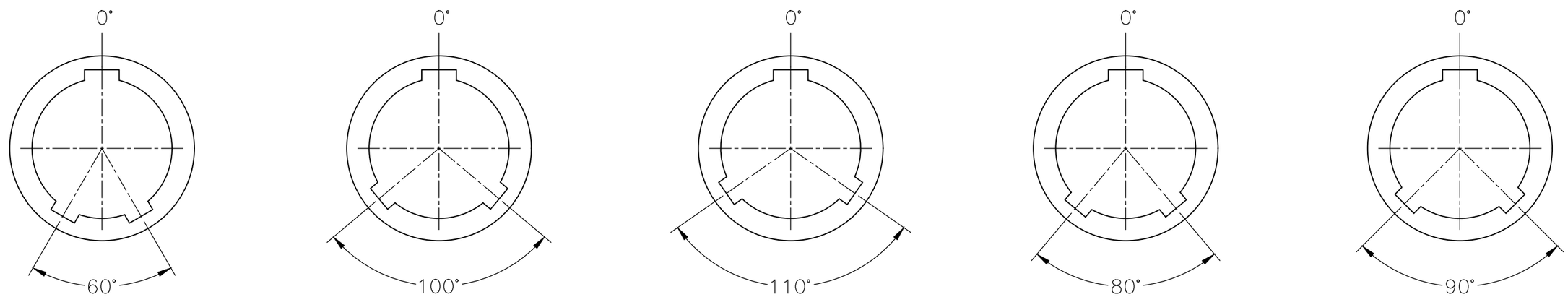

THIRD ANGLE PROJECTION				TOLERANCES UNLESS OTHERWISE SPECIFIED				CIRCON® Dongguan Circon Technology Co.,Ltd.		
UNITS ■ mm □ INCH				0 PLC ± 1.00 1 PLC ± 0.50 2 PLC ± 0.25 3 PLC ± 4 PLC ±				TITLE: 2P CIRCULAR CONNECTOR FIXED SOCKETS–METAL SHELL		
ANGLES 0 PLC ± 3 1 PLC ± 2										
APPROVED BY	JACK	DATE	2026–10–15	C	DRAWING NO.	A–M–516	REV.			
CHECKED BY	CHARLES	DATE	2026–10–15		PART NO.	2PHFHXXXXX0DXX	A3			
DRAWN BY	ANDY	DATE	2026–10–15	SIZE: A3	SCALE: 1:1	SHEET: 2 OF 2				

REV.	REVISION DESCRIPTION	ECR/ECN NO.	DATE