2P CIRCULAR ASSEMBLY P/N DESCRIPTION :

2P X FW X X XX X 0 D X X
① ② ③ ④ ⑤ ⑥ ⑦

① Shell:
A=Shell:PSU Grey
B=Shell:PSU Black
C=Shell:PEI Grey
D=Shell:PEI Black
E=Shell:PPSU Grey
F=Shell:PPSU Black
1=Shell:PC+ABS Grey
2=Shell:PC+ABS Black

② Insert
T=PPS—Unmarked
U=PEEK—Unmarked

③ Contact Plating
2=High Gold
A=Gold flash

④ Number of contacts
02=2Pin
⋮
26=26Pin

⑤ Keying
B=0°+60° H=0°+80°
C=0°+100° J=0°+90°
D=0°+110°

⑥ Nut Colour
0=Black 2=Red 5=Green 8=Grey
1=White 4=Yellow 6=Blue

⑦ Logo&Nut A mark
0=No Logo A=No Logo&With Ink mark
1=With Logo B=With Logo&With Ink mark

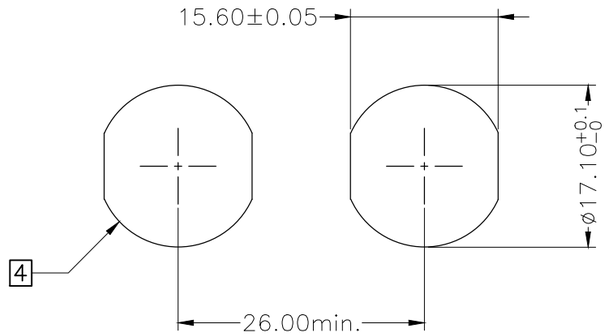

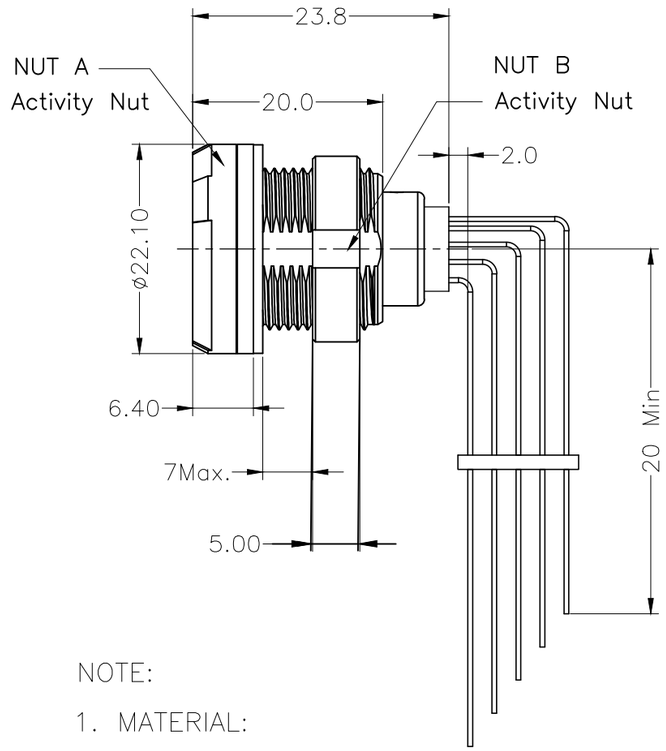

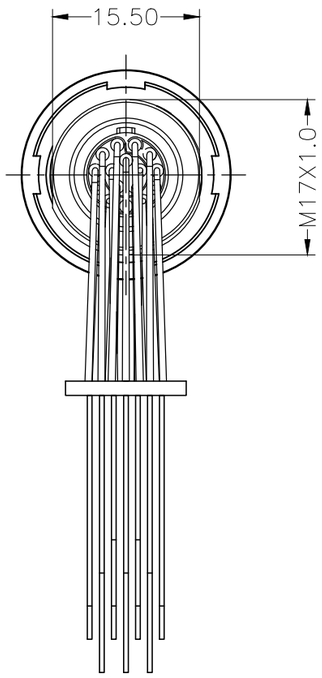

NOTE:

1. MATERIAL:

1.1.SHELL: THERMOPLASTIC,UL94V—0

1.2.CENTER CONTACT : COPPER ALLOY , Au PLATING

1.3.CENTER WIRE : COPPER ALLOY

1.4.NUT A : THERMOPLASTIC,UL94V—0

1.5.NUT B : THERMOPLASTIC,UL94V—0

1.6.SPACER : THERMOPLASTIC,UL94V—0

1.7.GASKET : ELASTOMER

2.NUMBER OF CONTACT : 2 TO 26 POSITION

3.RoHS DIRECTIVE COMPLIANCE

4.PANEL HOLE

REV.	REVISION DESCRIPTION	ECR/ECN NO.	DATE

THIRD ANGLE PROJECTION		TOLERANCES UNLESS OTHERWISE SPECIFIED	
UNITS ■ mm □ INCH		0 PLC ± 1.00 1 PLC ± 0.50 2 PLC ± 0.25 3 PLC ± 4 PLC ±	
ANGLES 0 PLC ± 3° 1 PLC ± 2°			
APPROVED BY	JACK	DATE	2026—6—11
CHECKED BY	CHARLES	DATE	2026—6—11
DRAWN BY	ANDY	DATE	2026—6—11

Dongguan Circon Technology Co.,Ltd.

TITLE: 2P CIRCULAR CONNECTOR
FIXED 90° SOCKETS/IP64

C	DRAWING NO.	A—M—832	REV. A0
	PART NO.	2PXFWXXXXX0DXX	

SIZE: A3 SCALE: 1:1 SHEET: 1 OF 4

VIEW FROM TERMINATION SIDE PIN PART:

2 POS.



3 POS.



4 POS.



5 POS.



6 POS.



7 POS.



8 POS.



10 POS.



12 POS.



16 POS.



19 POS.



26 POS.



KEYING (RECEPTACLE FRONT VIEW):

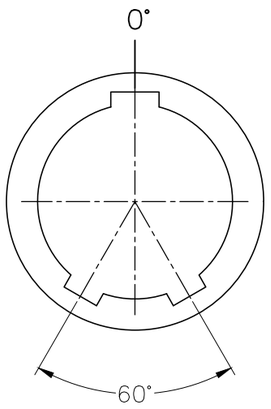

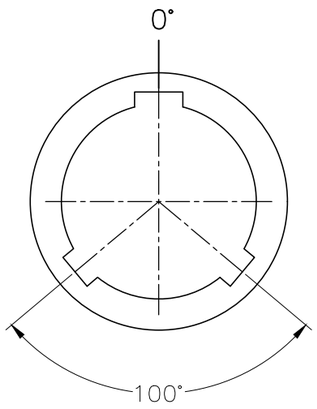

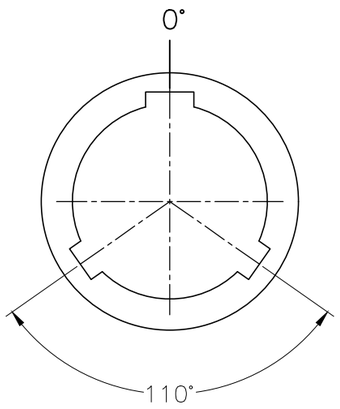

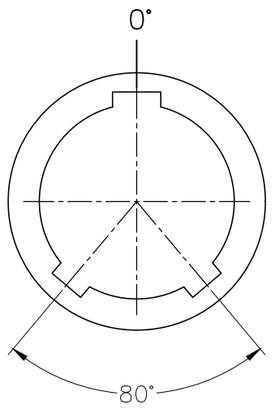

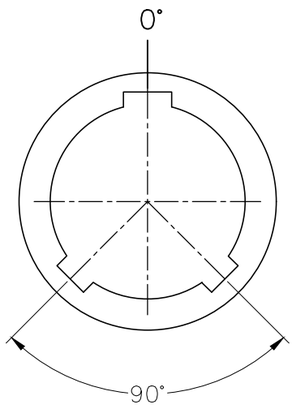

REV.	REVISION DESCRIPTION	ECR/ECN NO.	DATE

THIRD ANGLE PROJECTION		TOLERANCES UNLESS OTHERWISE SPECIFIED	
UNITS ■ mm □ INCH		0 PLC ± 1.00 1 PLC ± 0.50 2 PLC ± 0.25 3 PLC ± 4 PLC ±	
ANGLES 0 PLC ± 3° 1 PLC ± 2°			
APPROVED BY	JACK	DATE	2026-6-11
CHECKED BY	CHARLES	DATE	2026-6-11
DRAWN BY	ANDY	DATE	2026-6-11

CIRCON®

Dongguan Circon Technology Co.,Ltd.

TITLE: 2P CIRCULAR CONNECTOR FIXED 90° SOCKETS/IP64

C	DRAWING NO.	A-M-832	REV. A0
	PART NO.	2PXFWXXXXX0DXX	
SIZE: A3	SCALE: 1:1	SHEET: 2 OF 4	

PCB DRILLING PATTEN:

2 PIN

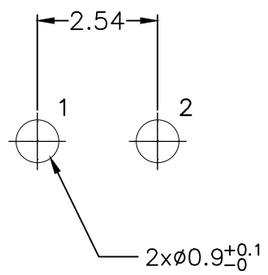

3 PIN

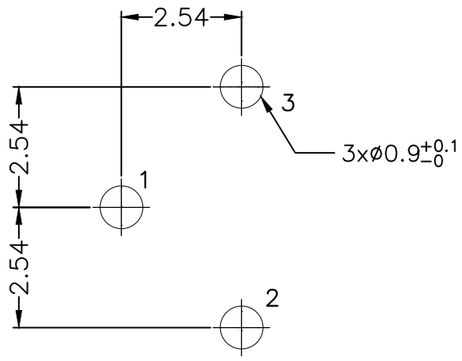

4 PIN

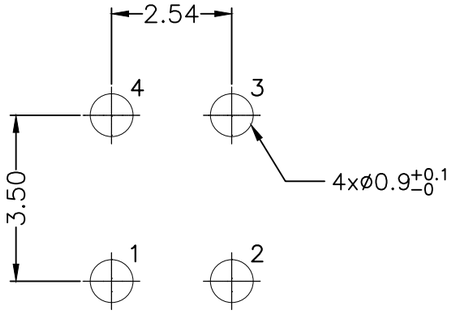

5 PIN

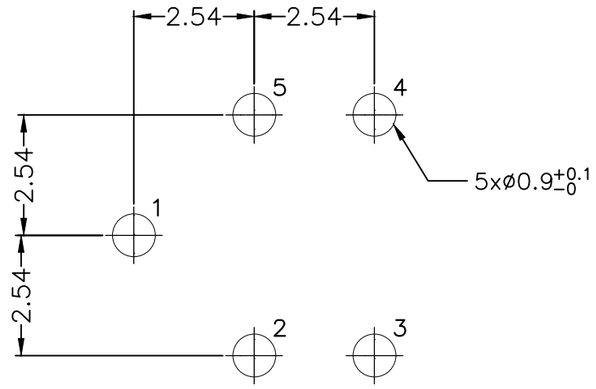

6 PIN

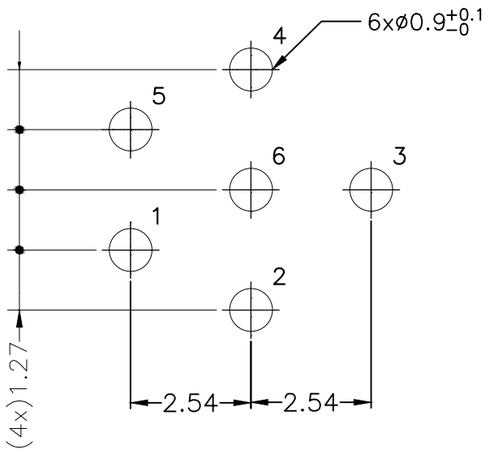

7 PIN

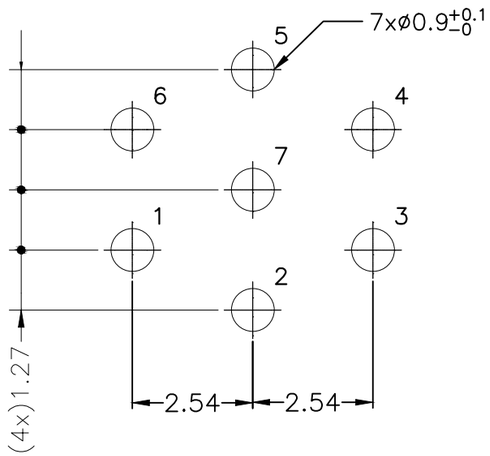

8 PIN

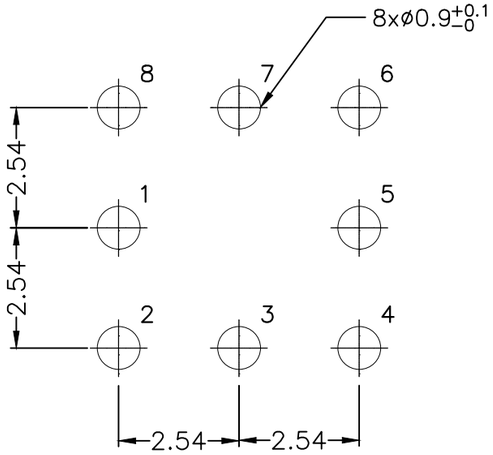

10 PIN

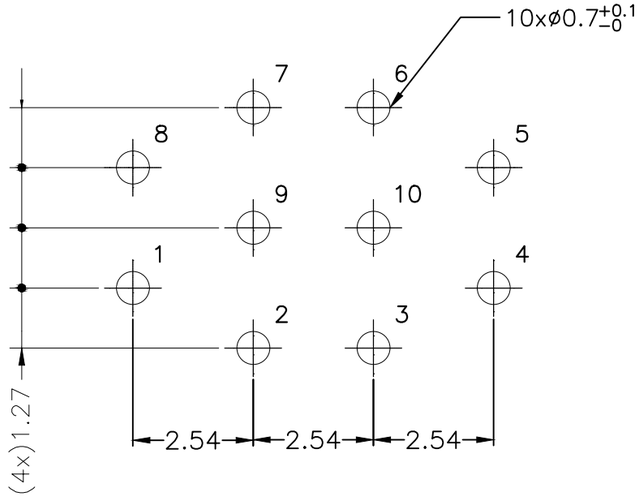

THIRD ANGLE PROJECTION		TOLERANCES UNLESS OTHERWISE SPECIFIED	
UNITS ■ mm □ INCH		0 PLC ± 1.00 1 PLC ± 0.50 2 PLC ± 0.25 3 PLC ± 4 PLC ±	
ANGLES 0 PLC ± 3° 1 PLC ± 2°			
APPROVED BY	JACK	DATE	2026-6-11
CHECKED BY	CHARLES	DATE	2026-6-11
DRAWN BY	ANDY	DATE	2026-6-11

Dongguan Circon Technology Co.,Ltd.

TITLE: 2P CIRCULAR CONNECTOR
FIXED 90° SOCKETS/IP64

C	DRAWING NO.	A-M-832	REV. A0
	PART NO.	2PXFWXXXXX0DXX	

SIZE: A3 | SCALE: 1:1 | SHEET: 3 OF 4

REV.	REVISION DESCRIPTION	ECR/ECN NO.	DATE

PCB DRILLING PATTEN:

12 PIN

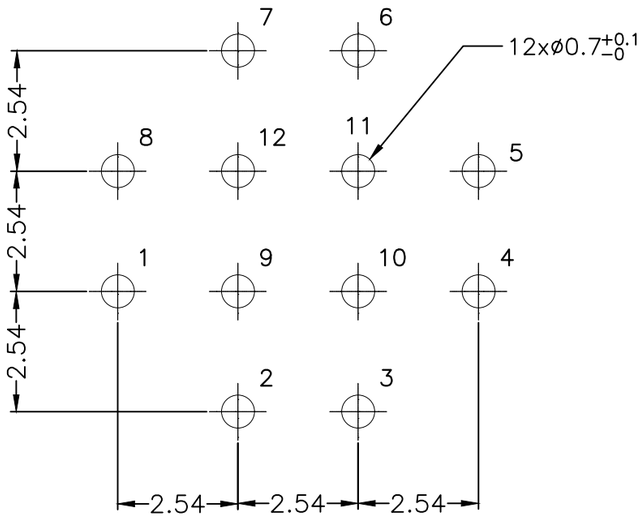

16 PIN

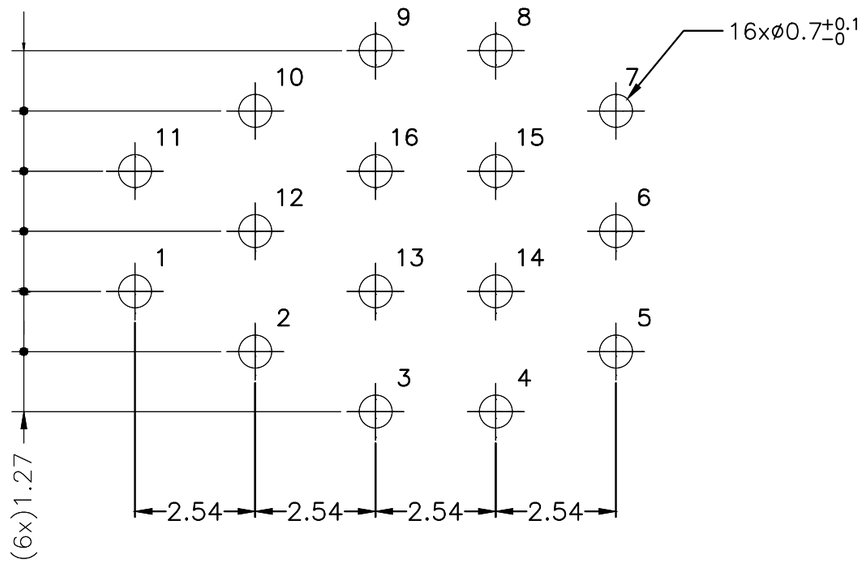

26 PIN

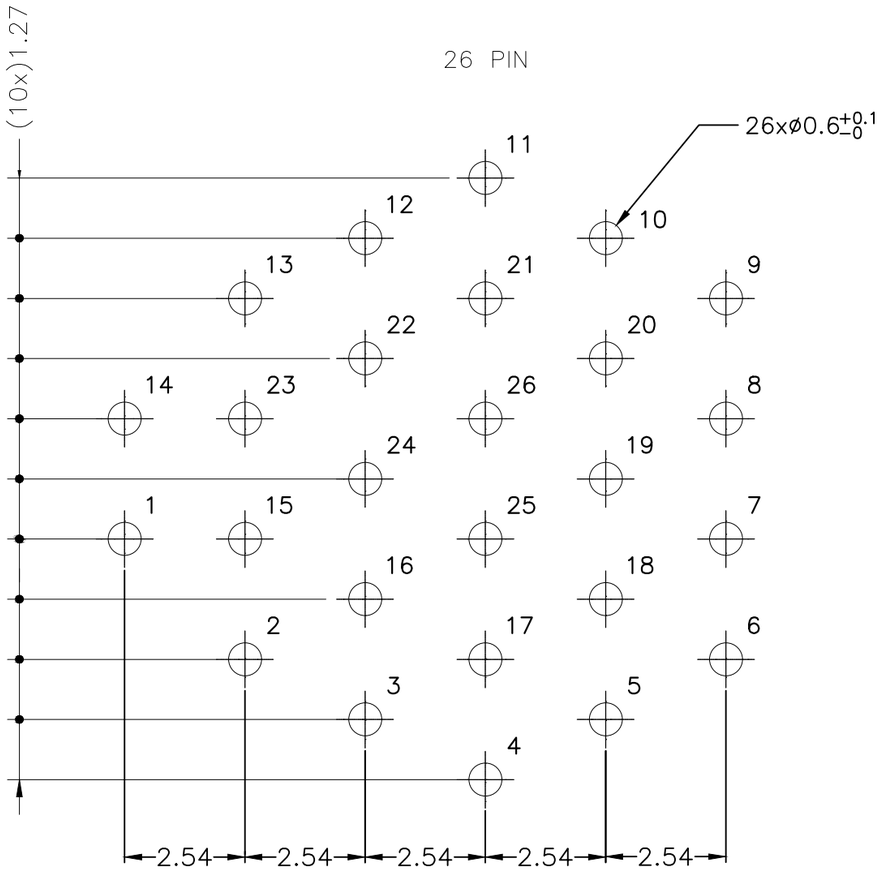

19 PIN

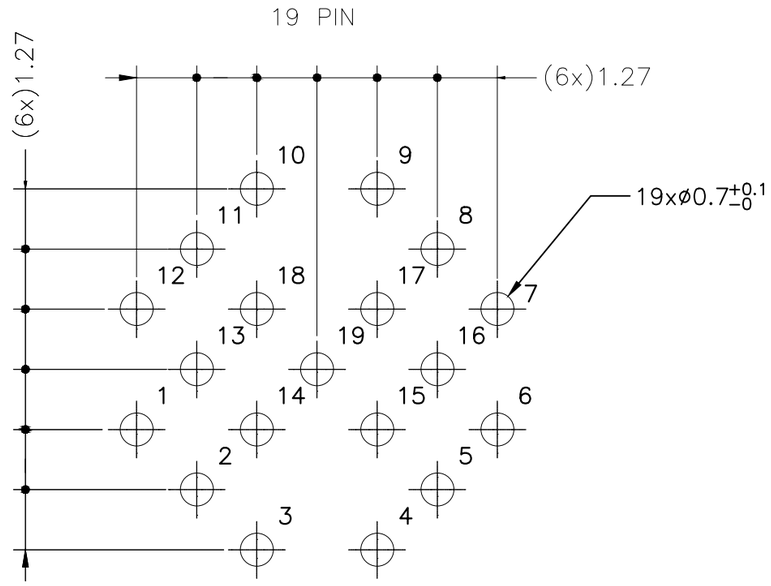

THIRD ANGLE PROJECTION		TOLERANCES UNLESS OTHERWISE SPECIFIED	0 PLC ± 1.00 1 PLC ± 0.50 2 PLC ± 0.25 3 PLC ± 4 PLC ±
UNITS ■ mm □ INCH			
ANGLES 0 PLC ± 3° 1 PLC ± 2°			

Dongguan Circon Technology Co.,Ltd.

TITLE: 2P CIRCULAR CONNECTOR FIXED 90° SOCKETS/IP64

APPROVED BY	JACK	DATE	2026-6-11	C	DRAWING NO. A-M-832 REV. A0
CHECKED BY	CHARLES	DATE	2026-6-11		PART NO. 2PXFWXXXXX0DXX
DRAWN BY	ANDY	DATE	2026-6-11	SIZE: A3	SCALE: 1:1 SHEET: 4 OF 4

REV.	REVISION DESCRIPTION	ECR/ECN NO.	DATE