2P CIRCULAR DISPOSABLE P/N DESCRIPTION :

2P X MB X X XX X 0 0 A 0
① ②③④⑤

① Shell Material
A=PSU Grey
B=PSU Black
C=PEI Grey
D=PEI Black
1=PC+ABS Grey
2=PC+ABS Black

② Insert Material
P=PEEK
S=PPS

③ Plating
2=High Gold
A=Gold flash

④ Number of contacts
26=26Pin
32=32Pin
34=34Pin

⑤ Keying
B= 0°+60°
C= 0°+100°
D= 0°+110°
H= 0°+80°
J= 0°+90°

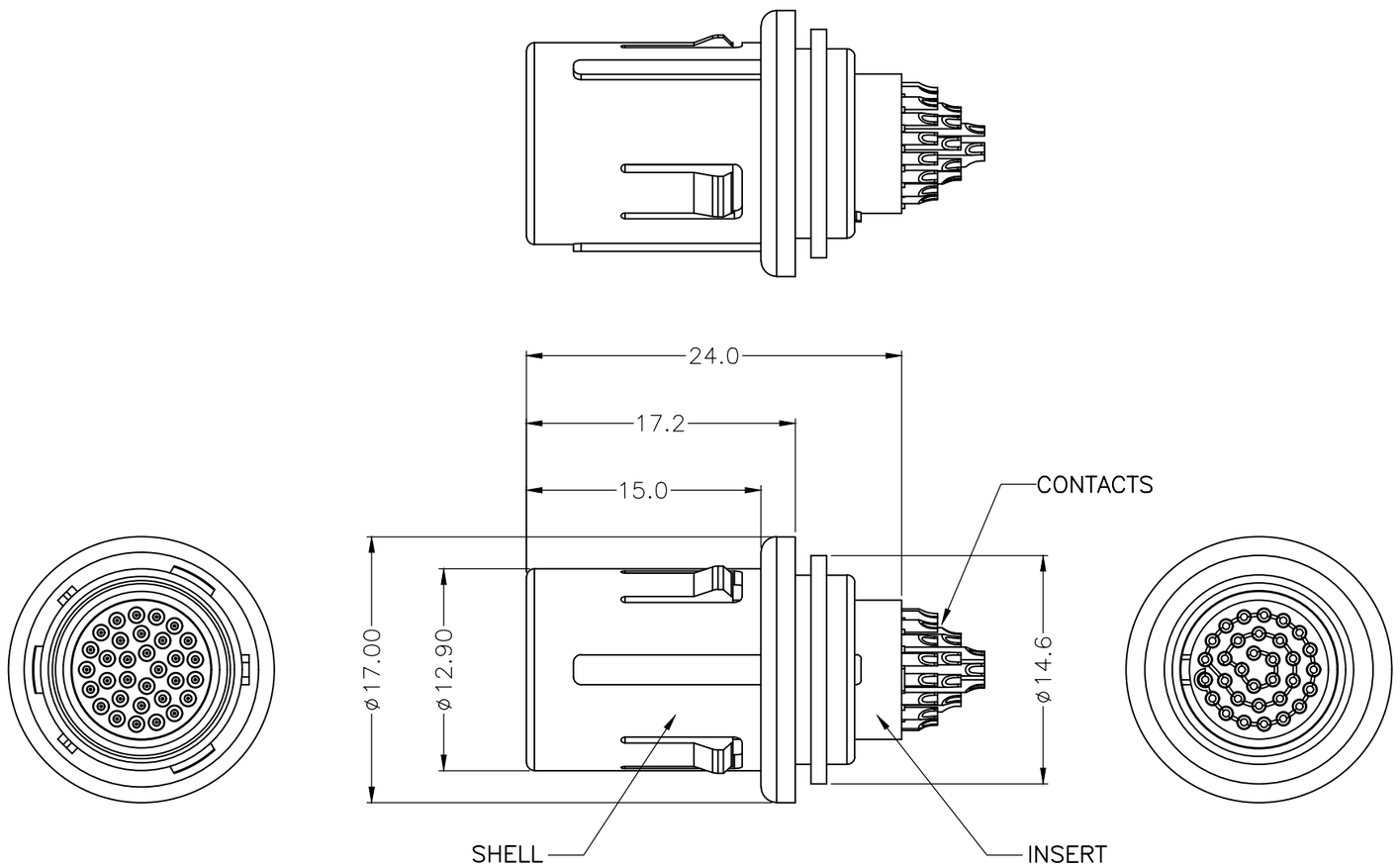

NOTE:
1. MATERIAL:
1.1.SHELL: THERMOPLASTIC,UL94V-0
1.2.INSERT: THERMOPLASTIC,UL94V-0
1.3.CENTER CONTACT : COPPER ALLOY,Au PLATING
2.RoHS DIRECTIVE COMPLIANCE

REV.	REVISION DESCRIPTION	ECR/ECN NO.	DATE

THIRD ANGLE PROJECTION

UNITS ■ mm □ INCH

ANGLES 0 PLC ± 3°
1 PLC ± 2°

TOLERANCES UNLESS OTHERWISE SPECIFIED
0 PLC ± 1.00
1 PLC ± 0.50
2 PLC ± 0.25
3 PLC ±
4 PLC ±

APPROVED BY	JACK	DATE	2023-3-29
CHECKED BY	CHARLES	DATE	2023-3-29
DRAWN BY	ANDY	DATE	2023-3-29

Dongguan Circon Technology Co.,Ltd.

TITLE: 2P CIRCULAR CONNECTOR
DISPOSABLE PLUGS-TYPE B

C	DRAWING NO.	A-M-372	REV. A0
	PART NO.	2PXMBXXXXX00A0	

SIZE: A3 | SCALE: 1:1 | SHEET: 1 OF 2

KEYING (PLUG FRONT VIEW)

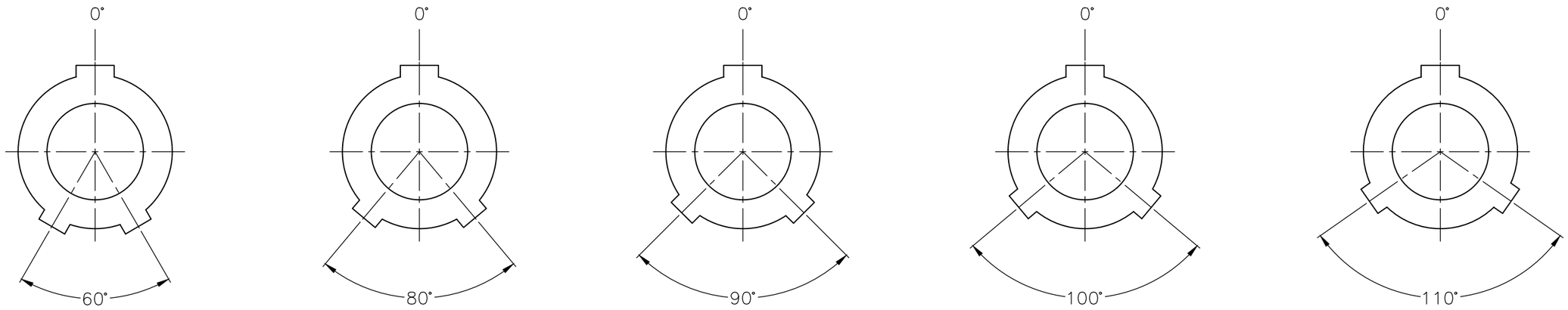

VIEW FROM TERMINATION SIDE PIN PART

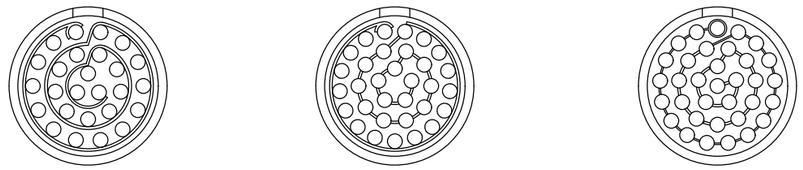

26 POS. 32 POS. 34 POS.

THIRD ANGLE PROJECTION		TOLERANCES UNLESS OTHERWISE SPECIFIED	
UNITS ■ mm □ INCH		0 PLC ± 1.00 1 PLC ± 0.50 2 PLC ± 0.25 3 PLC ± 4 PLC ±	
ANGLES 0 PLC ± 3° 1 PLC ± 2°			
APPROVED BY	JACK	DATE	2023-3-29
CHECKED BY	CHARLES	DATE	2023-3-29
DRAWN BY	ANDY	DATE	2023-3-29

Dongguan Circon Technology Co.,Ltd.

TITLE: 2P CIRCULAR CONNECTOR
DISPOSABLE PLUGS-TYPE B

C	DRAWING NO.	A-M-372	REV. A0
	PART NO.	2PXMBXXXXX00A0	

SIZE: A3 | SCALE: 1:1 | SHEET: 2 OF 2

REV.	REVISION DESCRIPTION	ECR/ECN NO.	DATE