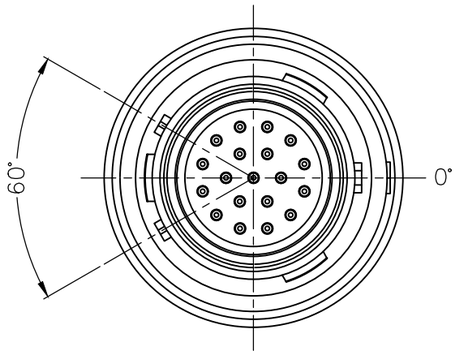

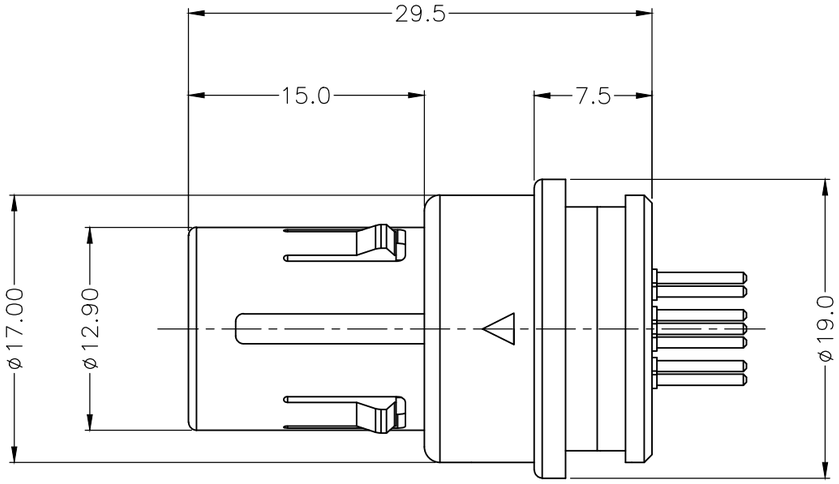

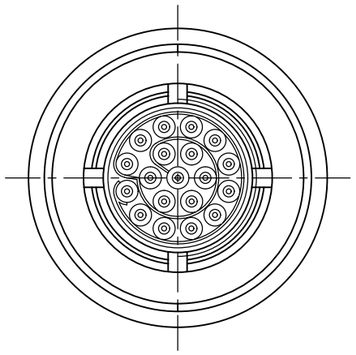

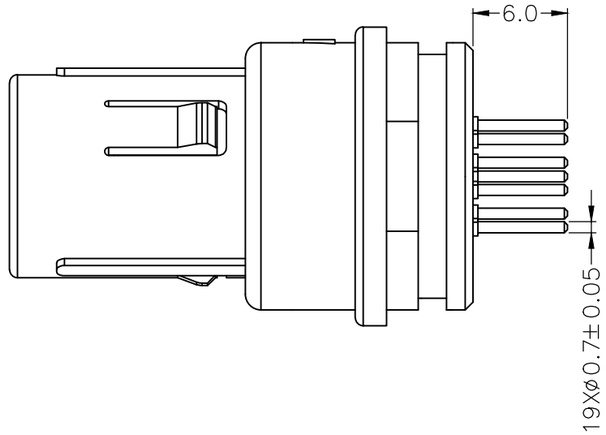

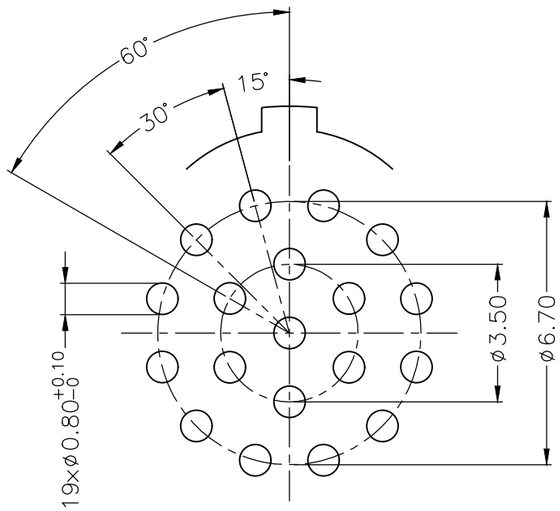

PCB LAYOUT

NOTE:

1. MATERIAL:

1.1.SHELL: THERMOPLASTIC,UL94V−0

1.2.INSERT: THERMOPLASTIC,UL94V−0

1.3.CENTER CONTACT : COPPER ALLOY,Au PLATING

2.NUMBER OF CONTACT : 19 POSITION

3.RoHS DIRECTIVE COMPLIANCE

REV.	REVISION DESCRIPTION	ECR/ECN NO.	DATE

THIRD ANGLE PROJECTION		TOLERANCES UNLESS OTHERWISE SPECIFIED		Dongguan Circon Technology Co.,Ltd.
UNITS ■ mm □ INCH		0 PLC ± 1.00 1 PLC ± 0.50 2 PLC ± 0.25 3 PLC ± 4 PLC ±		TITLE: 2P CIRCULAR CONNECTOR DISPOSABLE PLUGS−PCB CONTACTS
ANGLES 0 PLC ± 3° 1 PLC ± 2°				C / DRAWING NO. A−M−515 / REV. A0 PART NO. 2PAMD0A19B00A0
APPROVED BY	JACK	DATE	2024−5−21	
CHECKED BY	CHARLES	DATE	2024−5−21	
DRAWN BY	ANDY	DATE	2024−5−21	SIZE: A3 / SCALE: 1:1 / SHEET: 1 OF 1